Western Engineering

VOL. 3 SAN FRANCISCO, OCTOBER, 1913 NO. 4

PUBLISHED MONTHLY BY THE WESTERN ENGINEERING PUBLISHING CO. AT 420 MARKET STREET, SAN FRANCISCO.

Entered as second-class matter, June 1, 1912, at the post-office at San Francisco, California, under Act of March 3, 1879

Telephone Kearny 4777. Cable Address: Pertusola. Code: Bedford McNeill (2 editions).

BRANCH OFFICES:

CHICAGO—734 Monadnock Building. NEW YORK—Woolworth Building.
LONDON—The Mining Magazine, 819 Salisbury House, E.C.

ANNUAL SUBSCRIPTION:

United States and Possessions, and Mexico $3
Other Countries in Postal Union 4

CHARLES T. HUTCHINSON, Editor L. A. GREENE, Business Manager H. L. QUIGLEY, Advertising Manager

TABLE OF CONTENTS

EDITORIAL: Page.
- Notes 249
- The American Petroleum Society 250
- Competition 251

REVIEW OF THE MONTH 253

ARTICLES:
- Sutter Basin Reclamation Project 257
- Progress in the Cat Canyon Oilfield ..... *Howard D. Smith* 264
- Cost of Reporting on an Irrigation Project ..... *Charles Kirby Fox* 267
- Reinforced Concrete Pontoons for a Floating Boathouse ..... *D. C. Findlay* 270
- Cost of Pumping Oil by Electricity in the California Oilfields ..... *S. G. Gassaway* 273
- Santa Ana Reinforced Concrete Arch Bridge ..... *W. M. Thomas* 278
- New Oil Engine Installation 284

THE ENGINEERING DIGEST:
- Twin Peaks Tunnel, San Francisco 285
- The Engineers' Club of Seattle ..... *J. Thomas Dovey* 286
- The American Petroleum Society 287
- The Pacific Light and Power System ..... *B. P. Rowe* 288
- Prevention of Waste of Oil and Gas ..... *Ralph Arnold and V. R. Garfias* 291
- Fuel Consumption in Motor Ships 297
- Comparative Costs in Road and Pavement Work ..... *Fred L. MacPherson* 299
- Measuring the Sewage of Sacramento 300
- Strength of Long-Seasoned Douglas Fir and Redwood ..... *Arthur C. Alvarez* 303
- Instructions for Diesel Engineers ..... *John Pierce* 305
- Calculation of Stresses in Plate Girder Spans ..... *C. H. Marks* 308

COMPANY REPORTS 311

ENGINEERS' NOTE BOOK:
- A Rational Formula for Asphalt Street Surfaces ..... *J. Alden Griffin* 312

HINTS ON PRACTICE:
- Keys and How to Remove Them ..... *George Rice* 313
- Bending Cast Iron Pipes 314

BOOK REVIEWS 314

DISCUSSION:
- A Logical Highway Tax ..... *B. G. Marshall* 315
- Concrete Roads ..... *George Nelson* 317

INDUSTRIAL PROGRESS:
- A Filter Installation ..... *C. F. Braun* 319

OBITUARY 320

ENGINEERING NEWS 321

PERSONAL 327

SOCIETY MEETINGS; COMMERCIAL PARAGRAPHS 328

Generated on 2024-09-30 00:23 GMT / https://hdl.handle.net/2027/uiug.30112007837898
Public Domain, Google-digitized / http://www.hathitrust.org/access_use#pd-google

Digitized by Google

Original from
UNIVERSITY OF ILLINOIS AT
URBANA-CHAMPAIGN

Generated on 2024-09-30 00:17 GMT / https://hdl.handle.net/2027/uiug.30112007837898
Public Domain, Google-digitized / http://www.hathitrust.org/access_use#pd-google

Digitized by Google

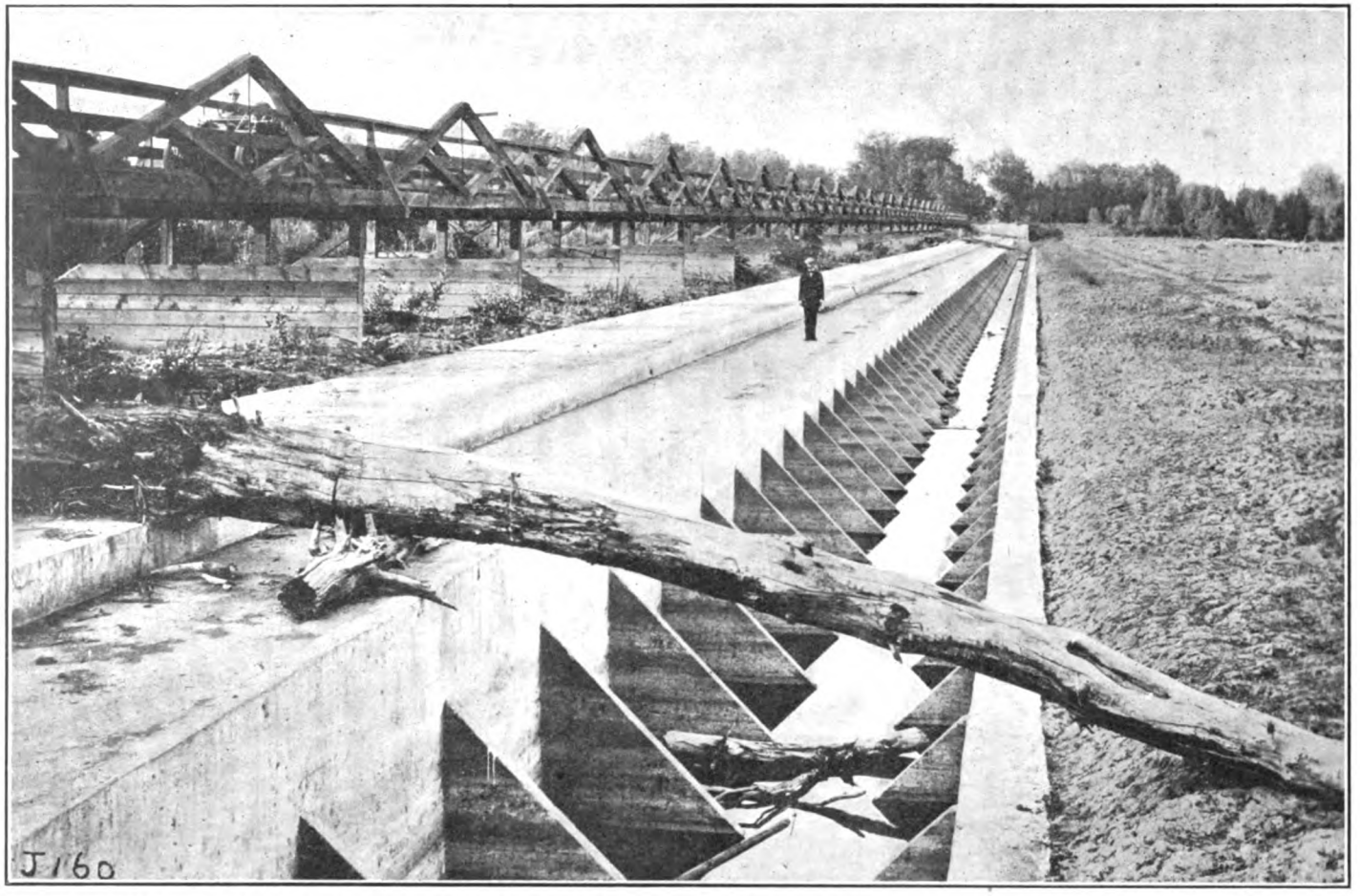

TISDALE WEIR, BUILT BY THE STATE OF CALIFORNIA AS AN EASEMENT TO ALLOW FLOOD WATER TO FLOW FROM THE SACRAMENTO RIVER INTO SUTTER BASIN. (See page 257.)

Original from
UNIVERSITY OF ILLINOIS AT
URBANA-CHAMPAIGN

EDITORIAL

AMONG those who have voiced their disapproval of the graduated surtax on incomes in excess of $500,000 per annum, editors of technical periodicals are significantly absent.

WHILE the publication of cost data pertaining to engineering construction is not infrequent, information regarding the cost of reconnaissance work is most difficult to obtain. For this reason, the data given in Mr. Charles Kirby Fox's paper in this issue should prove of exceptional value to engineers whose practice covers the field of examination work.

ON August 26 official dedicatory exercises were held in celebration of the completion of the great Keokuk hydro-electric power project, thus forever relegating to oblivion the good old conundrum of our youth, "Why don't they build mills on the Mississippi?" The old answer is no longer available, as Mr. Hugh L. Cooper and his corps of engineers have proved that "Dam it they can."

DEVELOPMENT of water-power in California continues to increase, as is shown by the grant to the Sierra Electric Power Company by the Secretary of Agriculture of the right to use for power development certain land within the Lassen National Forest. The water-power project is situated on Mill creek and about 25 miles east of Red Bluff in Tehama county. By means of low dams across this creek, the flow is to be directed into a conduit with a capacity of 300 second feet and a total length of more than 16 miles. A small regulating reservoir is to be built at the upper end of the pressure pipes. By this means a large portion of the waste of water during the hourly fluctuations of load will be reduced and possibly eliminated. The power-house will be built of reinforced concrete to enclose a plant of 22,500 kilowatts capacity and the transmission voltage will be 110,000.

REDUCED to the final analysis, operating cost is the chief factor determining the selection of engineering apparatus. Oil operators will be especially interested in Mr. S. G. Gassaway's paper in this issue giving comparative operating costs for pumping oil by electricity and by other methods. Judging by the figures quoted, it would appear that Mr. Gassaway needs no further justification for concluding that in the oilfields of California "electric power has come to stay."

MANY suggestions have been made concerning the best method of imposing a tax for road maintenance. Mr. Marshall's plan, published under 'Discussion' in this issue, offers some interesting ideas that are well worth serious consideration. His plan would place the burden of taxation primarily upon the user of the road at rates directly proportionate to the effect upon the road surface of the vehicle used. People erroneously credit the fast-moving automobile with being the chief agent of destruction to road surfaces, and neglect the slow moving but heavily loaded motor truck and heavy trac-

Generated on 2024-09-30 00:18 GMT / https://hdl.handle.net/2027/uiug.30112007837898
Public Domain, Google-digitized / http://www.hathitrust.org/access_use#pd-google
Digitized by Google
Original from
UNIVERSITY OF ILLINOIS AT
URBANA-CHAMPAIGN

tion engine with broad tired cleated wheels. It would not be the object of Mr. Marshall's plan to impose taxes at rates that would be destructive to the industry, but rather to obtain a graduated scale of rates that would be fair and correctly represent the destructive effect of each type of vehicle upon the road. We hope that others may add to this discussion.

ONE of the results of the approval by the people of San Francisco of the $3,500,000 bond issue for extensions to the municipal street railway has been the abandonment of the Fillmore Street tunnel project. This tunnel was included in the general plan advocated by Mr. Bion J. Arnold for the solution of San Francisco's traffic problems, and was regarded as necessary for the handling of crowds to and from the Exposition if the extensions to the municipal railway system failed to receive approval. As the street railway bonds were approved, the construction of the Fillmore Street tunnel was regarded by the city Supervisors as an expense not warranted at the present time.

ALTHOUGH the disposal of garbage is usually regarded as an inevitable source of expense, the city of Los Angeles has taken steps to convert this into revenue. The Board of Public Works has recently consummated a contract with Mr. C. D. Crouch in which the latter agrees to construct at his own expense a garbage reduction plant at a cost of about $275,000 and to pay 51 cents per ton for the privilege of reducing all of the city garbage during the next ten years. The manufacture of [illegible] by-products such as soap [illegible] zer, and oils will yi[illegible] om the operation of the plant. Mr. A. F. Matlack, who is chief engineer for Mr. Crouch, has charge of designing the plant, which is to be laid out along the lines of the most approved European practice. The city expects to derive an annual income in excess of $30,000 from this source.

THE decision of the jury in the case of the city of Sacramento *v.* the Swanston estate, clears the way for commencing the construction of the Brytes Bend by-pass, for which $880,000 was provided in a recent bond issue voted by the people. The verdict granted to the Swanston estate $250 per acre for 161 acres of land that would be removed in constructing the by-pass, and $83.33⅓ per acre for damage that will be done to 100 acres adjoining. As this is about five times as much as the city offered to allow, it is likely that counsel for the city will appeal the case, in which case construction work would be delayed over another flood season and the city and adjoining territory be subject again to much damage.

The American Petroleum Society

Oil operators will be especially interested in the announcement in this issue of the formation of the American Petroleum Society on September 10 at the Experiment Station of the United States Bureau of Mines, Pittsburgh, Pennsylvania. It has been recognized for some time that the birth of a new profession has taken place, that of petroleum engineer. Some of our more prominent universities have had under discussion the establishment of a chair of petroleum engineering, and the formation of the new society should go far toward placing petroleum produc-

Generated on 2024-09-30 00:23 GMT / https://hdl.handle.net/2027/uiug.30112007837898
Public Domain, Google-digitized / http://www.hathitrust.org/access_use#pd-google
Digitized by Google
Original from UNIVERSITY OF ILLINOIS AT URBANA-CHAMPAIGN

tion in its proper place as a specialized branch of engineering. It is interesting to note in this connection that the Society proposes to hold its annual meeting for 1915 in San Francisco during the Panama-Pacific Exposition. This fact should give added impetus to the movement now well under way toward the preparation of an adequate exhibit representing the oil industry. Fresno county has already appropriated $3500 for this purpose, which will undoubtedly be supplemented by private subscriptions from the individual oil companies in order that the famous Coalinga district may be adequately represented. Messrs. R. L. Peeler, Carl Baker, R. S. Haseltine, and S. H. Hain are canvassing the district and have already secured a great number of fossils and geological specimens. The exhibit is being classified and arranged in the office of the Coalinga Gas & Power Company. Other oil-producing districts should recognize this opportunity afforded by the Exposition and not lag behind Coalinga.

Competition

Competition is the life of trade, perhaps. Our lawmakers are seeking by legislative enactments of one kind or another the best means to secure free and open trade competition. 'Trusts' are being dissolved as rapidly as the machinery of the Supreme Court can be operated, but thus far it seems that the good old rule of supply and demand is a far more potent factor in regulating prices than all the laws and resolutions combined. A Congress that can pass both an anti-trust act, and a high protective tariff presents a curious anomaly. That the various laws passed for the regulation of public utilities in several states not only sanction but promote monopoly under government regulation has been demonstrated, especially in California. Nothing short of genius is required to interpret the California Public Utilities Act, with justice to opposing parties. Decisions rendered thus far tend to place existing utilities firmly in possession of whatever field they happen to occupy, and shut the door in the face of any competing company that desires to enter the same field. The only possible chance that a competitor stands is to be able to prove that the service and rates of the existing utility are inadequate or unsatisfactory. In other words, existing utilities are made reasonably secure in the possession of a perpetual monopoly of whatever field they may occupy so long as they render adequate service at prices that are adjudged reasonable. This, it appears to us, is a long way from free and open competition, and cannot fail ultimately to affect future development. But here arises the question, do we want free and open competition? One need not go very far back in commercial history to recall the disastrous result of unrestricted trade. There are but two kinds of competition, that in price and in service. In the great majority of cases, competition means but one thing, price cutting, with a resulting lower quality of service to make the loss as small as possible until one competitor or the other is driven to the wall. In the 'good' old days, competition of this character constituted the meal ticket of the unscrupulous promoter who appeared at regular intervals and gathered together sufficient money to start something, with the sole object in view of ultimately selling out at a handsome profit. This type of genius would face many difficulties today, but in eliminating him from the industrial activi-

Generated on 2024-09-30 00:20 GMT / https://hdl.handle.net/2027/uiug.30112007837898
Public Domain, Google-digitized / http://www.hathitrust.org/access_use#pd-google
Digitized by Google
Original from UNIVERSITY OF ILLINOIS AT URBANA-CHAMPAIGN

ties of the day, have we not done away with the honest competitor as well? A public utility is serving a community, well and faithfully and at prices consistent with the cost of the service rendered. A new man enters the field with improved apparatus or a source of supply nearer the consumer. These conditions possess certain economic advantages that render it possible to furnish as good service at reduced rates. Would the latter be allowed to enter the field or would the existing company be permitted to continue operating at a reduced revenue? Formerly a deficit resulting from a rate war in one community would, in a measure, be counteracted by increased exactions in another where an unrestricted monopoly was enjoyed. Nowadays this cannot so easily be done. It is interesting to speculate as to the possible outcome of the present government tendency to regulate everythjng. Such of the great corporations as have been subjected to the dissolution process seem hardly less great or powerful. Should the application of government regulation be extended beyond the field of public utilities, it would ultimately make us a nation of employees. This would remove in a large measure the incentive to individual effort and make it practically impossible for a man to engage in business on his own account. It is true that there are promotions in large corporations, and that there is opportunity to rise for the man of exceptional ability, but there is no need to be concerned about the exceptional man. He can take care of himself. It is with the average man that we must deal, the 95 per cent that constitutes the wage-workers rather than the 5 per cent that includes the superintendent, manager, or president. Large corporations are gradually adopting for their employees a plan of retirement for age accompanied by pensions after stated terms of continuous service. This is undoubtedly far superior to turning superannuated men adrift with no means of obtaining a livelihood, but it cannot be denied that it has also a stifling effect upon individual effort, and that each additional year of service increases the dependence of the employee. As pensions are granted only after a stated period of *continuous* service, the problem of discipline among permanent employees should be a simple one. Bellamy predicted that we would ultimately become an aggregation of employees, and it would appear that we are slowly but surely drifting toward that goal, although the time when the hod-carrier will be on terms of social equality with the bank president is still far distant. There is no denying the economy that can be achieved through the skilful administration of large concerns such as the United States Steel Corporation, which controls within itself every stage in the manufacture of steel, from the mining of the ore to the delivery of the finished product. It would appear decidedly to our advantage to preserve the benefits derived from such organizations under proper governmental restrictions, but as we continue to measure the worth of a man's career in terms of dollars, large corporations offer a decreased individual opportunity to achieve what the world regards as success. Unrestricted competition. and therefore unrestricted individual opportunity, carries with it rate wars, periodic financial depression, and unstable trade conditions. Restricted competition and restricted individual opportunity make for more stable business conditions, and ultimately fewer swollen fortunes. How to preserve the benefits of both without retaining their faults, is the problem, the solution of which still appears to be far in the future.

Generated on 2024-09-30 00:17 GMT / https://hdl.handle.net/2027/uiug.30112007837898
Public Domain, Google-digitized / http://www.hathitrust.org/access_use#pd-google
Digitized by Google
Original from UNIVERSITY OF ILLINOIS AT URBANA-CHAMPAIGN

REVIEW OF THE MONTH

AT last the expected Democratic tariff bill has passed both the House and Senate and will soon be sent to the President for his approval. The currency reform measure, the other alleged stumbling-block in the path of business, will also be disposed of before long. Then will ensue a renewed business activity, unless all official and unofficial forecasters are wrong. Our system of government bears a striking resemblance to the automobile trade in that periodic 'new models' issue from the Washington factory to be adopted by the people and the old ones discarded. The automobile trade has one point of economic superiority, however, in that there is a market, such as it is, for last year's cars.

WHILE the Senate and House conferees are still deliberating over the Senate schedule, it is not anticipated that any changes of consequence will be made. The bill as passed by the Senate represents an average reduction of more than 4 per cent from the original House bill and nearly 28 per cent from the existing rates, so apparently the tariff has actually been revised downward. Asphaltum and bitumen have been added to the free list, which, however, will not affect to any extent the California oil industry. Pig iron, iron and steel blooms are also to be admitted free of duty. San Francisco foundrymen have for some time past been importing Chinese pig of good quality, and the removal of the duty should make it increasingly difficult for American pig iron manufacturers to market their production on the Pacific coast, unless the opening of the Panama canal should make possible reductions in freights that would counteract the lower cost of foreign production. The same is true of iron and steel blooms, as it is likely that the famous Sweden and Norway refined iron will by reason of its lower cost be used to an increased extent. A cynic once remarked that all congressmen were in favor of free trade regardless of their party affiliations, except on goods produced in their own districts. This is amusingly verified by the action of the two Louisiana senators who, although elected as members of a party committed to a reduction of the tariff, voted against their party and the bill because it provided for the admission of sugar free of duty.

AFTER many years of agitation, the income tax has at last arrived. Treasury experts have calculated that its provisions may be expected to aid in a large measure in overcoming the loss in government revenue due to the reduction in the tariff. The provisions of the law appear to be equably adjusted so that the burden of taxation may fall upon those best financially able to carry it. To make the punishment fit the crime has been celebrated in song and story, and most of us would regard with equanimity the prospect of paying a tax of 6 per cent on an income of $500,000 per annum. Incomes up to $3000 per annum for single men and $4000 per annum for married men are exempt, thus officially refuting the theory that two can live as cheaply as one, and placing an indirect though nevertheless effective tax upon the privilege of singleblessedness.

Generated on 2024-09-30 00:19 GMT / https://hdl.handle.net/2027/uiug.30112007837898
Public Domain, Google-digitized / http://www.hathitrust.org/access_use#pd-google
Digitized by Google
Original from
UNIVERSITY OF ILLINOIS AT
URBANA-CHAMPAIGN

ALL signs point to an ultimate triumph for San Francisco in its efforts to obtain the right to use the Hetch-Hetchy valley as a source of water supply. On September 3 the House of Representatives by a vote of 183 to 43 passed the bill introduced for this purpose. The bill then was sent to the Senate committee, where opposition was expected from Senators Smoot and Works. However, the proponents of the measure stole a march on these two gentlemen, during whose absence the bill was favorably reported to the Senate on September 24. No date has been set for its consideration, but it is expected that it will be taken up at an early date and favorable consideration is freely predicted. It is to be hoped that the end of this long struggle may soon be reached.

WHEN the project of piping natural gas from the Midway fields for domestic consumption at Los Angeles was started, the energetic inhabitants congratulated themselves upon the added attraction that a plentiful supply of cheap fuel would afford. The first hitch in the proceedings was encountered when the California Railroad Commission objected to certain terms between the Midway Gas Company as wholesaler and the local company which was to distribute the gas through its city mains to the consumer. Then came the question of rates to be charged to the consumer, always a fruitful bone of contention under any circumstances and complicated by new and unusual conditions for which there was no precedent on the Pacific coast.

AS usual this bone of contention was tossed freely back and forth between the local gas company and the city council. Many hearings were held while the days stretched into weeks and the weeks into months. As usual, the newspapers took the popular viewpoint and loudly advocated 30 cent gas whether the economic conditions justified such a rate or not. One fine morning, however, it was discovered that while the storm of rate fixing was raging overhead, the city mains were gently carrying a mixture of artificial and natural gas to the consumers and for which the latter were ostensibly paying the usual rate for the manufactured product. Under the circumstances one can understand why the local gas company should view with equanimity the delay in fixing the natural-gas rate.

WHETHER the Southern California Gas Company has been guilty of unethical conduct in serving mixed gas to its consumers at the price obtained for the more costly artificial product we will not attempt to say. It may be unsportsmanlike not to have shared its saving with the consumer, but it would hardly have been considered business to do so. On the other hand, it would appear that the management has committed a tactical blunder by its action, for the reason that the agitation now being conducted by the newspapers on this account is apt, in response to popular feeling, to influence the fixing of a rate lower than would ordinarily have been granted.

IN support of the agitation for a 30-cent rate for natural gas, all sorts of figures obtaining elsewhere are cited, most of which are both irrelevant and immaterial, in that details concerning all conditions determining these rates are lacking. There are accepted methods whereby rates of this kind may be determined, and many engineers who

Generated on 2024-09-30 00:18 GMT / https://hdl.handle.net/2027/uiug.30112007837898
Public Domain, Google-digitized / http://www.hathitrust.org/access_use#pd-google
Digitized by Google
Original from UNIVERSITY OF ILLINOIS AT URBANA-CHAMPAIGN

can work out the problem. That any plea for uniformity of rates is absurd is shown by a comparison between twelve localities where natural gas is used, the lowest being 16.88c. and the highest 39.73c., the variation being about 2.35 to 1. Mr. O. O. McReynolds, president of the Board of Public Utilities, is quoted as having said: "I believe it is a bad thing for the people to have the idea of 30-cent natural gas worked into them from this agitation in the newspapers, because nobody can tell just what the price should be until every consideration has been investigated." There can be no quarrel with this opinion, and in fairness to all concerned, judgment should be reserved until "every consideration has been investigated."

WHILE the rate charged by the Midway Gas Company to the distributing company has been stated to be 12 cents, the California Railroad Commission has issued an order to all who deal with natural gas calling for a general hearing to take place at San Francisco on October 23, where the prices charged for natural gas will be investigated. The City Council of Los Angeles has recognized the futility of attempting to determine upon retail rates until the wholesale rate has been fixed and have sought the services of the Railroad Commission with that end in view.

NEWS from the oilfields consists chiefly of an account of the activity of the Shell-Royal Dutch Company. The latest announcement is that it is to build a pipe-line from Coalinga through the Lost Hills, McKittrick, Midway, and Maricopa fields and west to tidewater, probably at Ventura. Opinions generally seem to point to the erection of the Shell refinery near Los Angeles rather than at San Francisco on account of the shorter distance from the Kern river fields. Of much greater interest, however, is the announcement that discoveries have been made by the Standard Oil Company that will have a great effect upon future oil refining. According to Mr. H. G. James, in the *Oil City Derrick*, the new process makes it possible to obtain a much greater percentage of gasoline from crude oil than heretofore, as the new method provides a way of breaking the hydrocarbons of petroleum into any combination needed and then condensing under compression. The new appliances called for by the process have already been installed in the plant of the Standard Oil Company at Whiting, Indiana, at a cost of $1,500,000 and in the Wood river plant at Alton, Illinois.

MR. JAMES, in discussing the process, says: "The installation of the new pressure system necessitates a complete reconstruction of a refinery. The Neodesha plant of the Standard has been handling about 7000 barrels of crude per day. The cost of shifting this plant to the new system will be over $500,000. The new process will reduce the percentage of fuel oil. It is understood that motor spirits will appear in the Kansas market in about six weeks and will sell for about 4 cents less than the present price of gasoline. When it is installed, the Neodesha plant will use about 8000 barrels of crude oil per day. The Neodesha refinery makes only kerosene, gasoline, road oils, gas, and fuel oils. The new system is completely revolutionizing affairs. The practical working of the process at the Whiting and Wood river refineries is bringing out new ideas respecting it. By some it is believed that

Generated on 2024-09-30 00:19 GMT / https://hdl.handle.net/2027/uiug.30112007837898
Public Domain, Google-digitized / http://www.hathitrust.org/access_use#pd-google
Digitized by Google
Original from UNIVERSITY OF ILLINOIS AT URBANA-CHAMPAIGN

eventually it will be possible to convert 75 per cent of crude oil into gasoline. Until the new process is worked down to a settled method, the business will be more or less in an unsettled state."

SAN FRANCISCO architects and contractors have introduced a novel idea for the preparation of estimates that is a long step in advance of existing methods. The old haphazard way of 'guessing' as to the quantity of material covered by a set of plans and specifications all too frequently resulted in the low bidder not finding out how badly he was mistaken in his figures until he had lost a goodly sum of money on the job. It is proposed to form a San Francisco Council of the American Institute of Quantity Surveyors. The objects of the society are to encourage better methods of estimating, dealing with bids, and to provide a forum where architects, engineers, contractors, and others may, as associate members, meet upon common ground and discuss methods of bidding upon contract work, and similar problems affecting the cost of buildings. The plan proposed is to adopt the quantity survey system which is used in Europe. To carry it out, a new class of professional men will appear in the building business, to be known as quantity surveyors. It will be their work to receive from architects complete plans and specifications of buildings, and from this basis make estimates of the quantities of materials to be used. The surveyors will be engineers specially trained in this class of work, and it is proposed to have laws enacted for their registration and examination by a state board. When the surveyor completes his quantity estimate of the material in a building, his list, together with the plans and specifications, are turned over to contractors for estimates. By this method the contractor will be relieved of the burden of estimating on the quantity of materials, thereby saving much needless duplication of labor. The cost of the quantity surveys is to be paid by the owner, as is the case for any other professional services. Under the proposed system the contractor is not held responsible for the material bids if the quantity estimated by the surveyor is not sufficient. On the other hand, the owner has the benefit of an expert's estimate of the quantity of material to be used in construction, and will thus be assured of obtaining more accurate figures than under the old method.

HYDRO electric power development in the Pacific Northwest, already large, is to be increased by 200,000 horsepower, according to Mr. Wilbur S. Yearsley of the International Power and Manufacturing Company. The power project is situated in Z canyon on the Pend Oreille river, 10 miles north of Metalline, Washington, and 2 miles south of the international boundary. It is stated that the low-water flow will develop 200,000 horsepower, while by utilizing available storage, 370,000 horsepower may be developed without considering the possibilities in the way of secondary power during the flood period. As a portion of the dam pondage is in the Kaniksen forest reserve, a bill was passed by Congress in 1907 granting its use to the Pend Oreille Development Company. The permit having expired, an extension of time was granted the promoters until May 20, 1915, and a further extension of one year has just been secured. The terms of the permit are set forth in the September number. It is stated that the project is held under sixty-day option by a group of Eastern capitalists.

Generated on 2024-09-30 00:23 GMT / https://hdl.handle.net/2027/uiug.30112007837898
Public Domain, Google-digitized / http://www.hathitrust.org/access_use#pd-google
Digitized by Google
Original from UNIVERSITY OF ILLINOIS AT URBANA-CHAMPAIGN

Sutter Basin Reclamation Project*

SUTTER BASIN, situated in Sutter county, California, is one of five vast fertile bodies of lowland lying in the trough of the Sacramento valley adjacent to the Sacramento river and tributaries. Like the other basins, it is inundated for such an extended period of each year that it is rendered impracticable for farming, except upon the marginal lands, but when reclaimed from overflow, will yield abundant crops of some of California's most profitable products.

The project under consideration comprises about 68,000 acres, situated in the lower end of Sutter basin between the Sacramento and Feather rivers. Practically all of this land consists of a surface soil composed of sediment and humus varying from 12 to 30 in. in depth, underlying which is a deep body of dark clayey loam. The adaptability of this character of soil to the growth of almost anything native to a temperate climate has been demonstrated.

Unlike some of the land in the delta regions, where reclamation work has proved expensive on account of the soil being of a peaty character, neither suitable for levee building nor for a foundation on which to build levees, the Sutter Basin lands present features of advantage in that the subsoil not only affords a stable foundation, but, when deposited in an embankment, will, after final settlement, become almost wholly impervious and but slightly erosive.

The Sacramento and Feather rivers form about three-quarters of the boundary of the lands under consideration, and, in times past, have overflowed and gradually built up their banks and the adjacent lowlands by the deposition of sediment, the greater amount of deposit taking place nearest the banks, thus forming a veritable basin and reducing the cost of surface drainage work to a minimum. History of reclamation in the Sacramento valley shows that it has been the universal practice to form district boundaries and construct reclamation works without regard to their effect on adjacent districts and without conformity to any general plan of flood control. In response to an appeal from the state of California, the federal government, after quite an exhaustive examination, presented a general plan of flood control for the entire Sacramento valley.† In order that reclamation districts formed hereafter shall not interfere with the Government's plan being carried out, the state has recently created a Reclamation Board and has provided, through legislative enactment, that no reclamation district shall be formed without first having the plans approved by that board. As to the nature of the Government's plan of flood control, something should be said in this connection; for, upon the completion of the Sutter Basin project as outlined, an extensive unit of the Government's plan will be carried into effect.

Briefly speaking, the Government's

*From a general and supplementary report by George N. Randle and a further report by Edward F. Haas, published through the courtesy of Louis Sloss & Co., San Francisco.

†House Document No. 81, 62nd Congress, 2nd Session.

Generated on 2024-09-30 00:17 GMT / https://hdl.handle.net/2027/uiug.30112007837898
Public Domain, Google-digitized / http://www.hathitrust.org/access_use#pd-google
Digitized by Google
Original from UNIVERSITY OF ILLINOIS AT URBANA-CHAMPAIGN

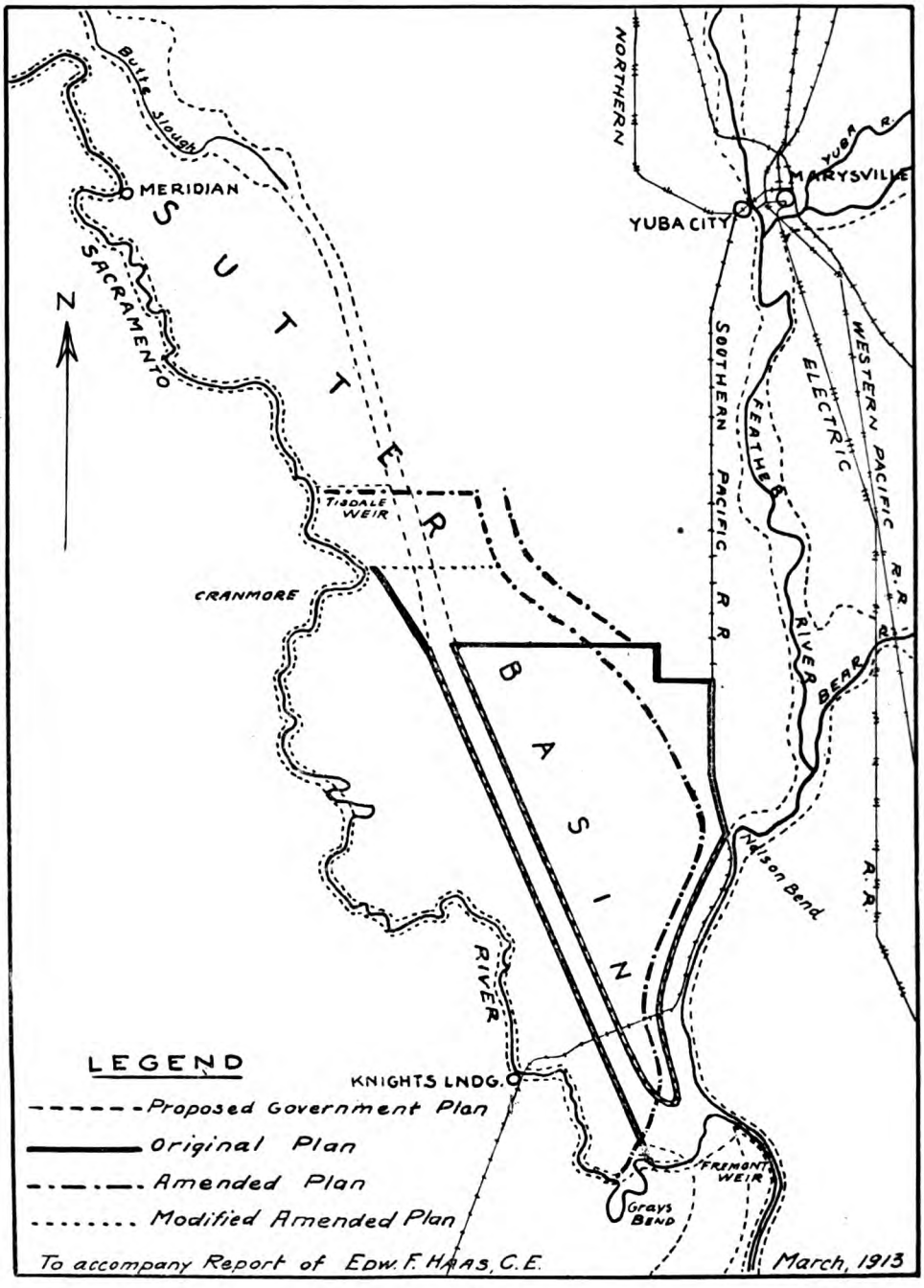

MAP OF SUTTER BASIN RECLAMATION PROJECT.

Generated on 2024-09-30 00:18 GMT / https://hdl.handle.net/2027/uiug.30112007837898
Public Domain, Google-digitized / http://www.hathitrust.org/access_use#pd-google
Digitized by Google
Original from UNIVERSITY OF ILLINOIS AT URBANA-CHAMPAIGN

plan consists in increasing the carrying capacity of the rivers by enlarging and improving the river channels and levees and confining such an amount of water to the channels as will be within the limits of safety; providing outlet weirs or spillways at congested points to relieve the river of the amount of water it is not capable of carrying; and conducting the surplus water from the weirs to a main by-pass channel which will extend the entire length of the valley, along the trough of the tule basin adjacent to the river, and finally reënter the lower river, where it is now being made of ample capacity for the entire floodwaters. The Government's plan of flood control provides for the location of the by-pass along the margin of the basin instead of in the trough, which gives it the following advantages: (1) minimum heights of levees; (2) decreased cost of construction and maintenance; (3) decreased length of levee system; (4) decreased amount of seepage on account of decreased length of levees; (5) possibility of a break in levee proportionately decreased with decreased length; (6) accessibility of district lands increased due to tract not being divided by by-pass channel; (7) most fertile lands in basin saved by doing away with waterway in by-pass channel; (8) prevention of lands east of by-pass channel being flooded by breaks occurring in the levee on the west bank of Feather river above Nelson slough; (9) decreased danger of a break in the levees on the west bank of Feather river above Nelson slough due to the high flood plane adopted for Feather river at and below Nelson slough.

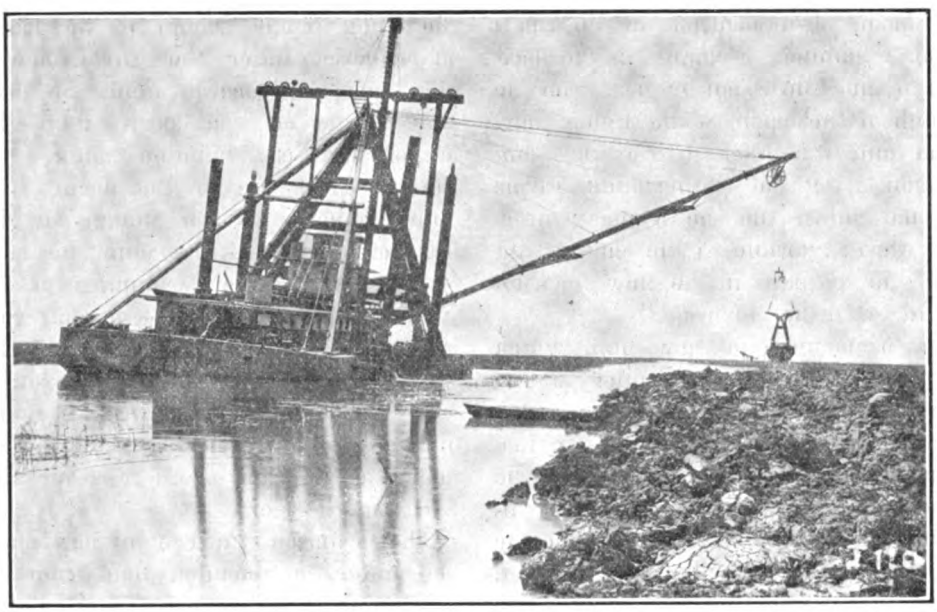

CLAM-SHELL DREDGE CONSTRUCTING BACK LEVEE IN SACRAMENTO FLOOD BASIN.

The objections to the Government's plan practically all arose from the fact that the by-pass channel was located in the trough of the basin. The California Débris Commission, in selecting a route for the main by-pass channels, considered that, in the absence of funds available for the purchase of land for the by-pass channels, any route they

Generated on 2024-09-30 00:20 GMT / https://hdl.handle.net/2027/uiug.30112007837898
Public Domain, Google-digitized / http://www.hathitrust.org/access_use#pd-google
Digitized by Google
Original from UNIVERSITY OF ILLINOIS AT URBANA-CHAMPAIGN

might select would meet with opposition from the property owners on whose land the by-passes were situated, and that the Commission was prompted to select the troughs of the basins as a route for the by-passes on the theory that, this route being along the lowest part of the basins, it might be claimed as a natural waterway, and, on that account, the opposition could be more easily overcome than in any other location.

As evidence that the Debris Commission is not partial to the troughs of the basins as a location for the main by-pass channels, a change in the location of the Yolo Basin by-pass from the trough of the basin to the higher marginal land was assented to by the Commission after the Netherlands Farms Co. had shown that the property interests were favorable to the change and that the by-pass in the new location would serve the purpose.

In preparing the new plan, which removed the by-pass channel to the east margin of the land, the state engineer, at the instance of the State Reclamation Board, proceeded with the collection of various topographic information not available at the time the Government's report was prepared. Upon the completion of the field work, George N. Randle was requested to join in the consideration of the Sutter Basin flood-control problem, and the amended plan following is the result of the cooperative work.

The chief departure of the amended plan from the original plan is in the construction of a more substantial levee along the Sacramento river from Tisdale weir to Knights Landing, and in the change of location and width of the by-pass channel, and in the proposed elevation and slope of the flood plane within the by-pass. Provision is made for conducting the same volume of floodwater through the entire length of the basin and delivering it at the Fremont weir near the junction of the Sacramento and Feather rivers at the same elevation proposed in the Government's plan of flood control. And in no way whatever will the amended plan for Sutter basin interfere with the Government's plan for the reclamation of the rest of the Sacramento Valley lowlands being carried out as originally designed.

The route of the by-pass channel, instead of extending along the low, fertile lands of the trough of the basin, as proposed under the Government's plan, has been located along the easterly border of the basin upon the higher and less valuable lands from the northern end of the basin to a point opposite Nelson slough on the Feather river. At this point the easterly by-pass levee terminates at its junction with the levee on the west bank of the Feather river, while the westerly by-pass levee continues southerly along the Feather river to a point opposite the west end of Fremont weir near the junction of the Feather and Sacramento rivers.

The proposed width of by-pass channel, under the amended plan, from the north end of the basin to a point opposite Nelson slough on the Feather river, is 4000 ft.; and from a point opposite Nelson slough to a point opposite the west end of Fremont weir, 6000 ft., exclusive of the width of the Feather River channel. The proposed width of the waterway between the inner toe of the levee and the left bank of the Sacramento river from Tisdale weir to Fremont weir is approximately 53 ft. It is also proposed, under the amended plan, to remove all trees, brush, and tule from the waterway along the Sacramento and Feather rivers and in the by-pass channels, in order that the free

Generated on 2024-09-30 00:17 GMT / https://hdl.handle.net/2027/uiug.30112007837898
Public Domain, Google-digitized / http://www.hathitrust.org/access_use#pd-google
Digitized by Google
Original from UNIVERSITY OF ILLINOIS AT URBANA-CHAMPAIGN

flow of water will not be obstructed.

The plans and estimates for the roads, drainage, and pumping system, under the amended plan, in no way differ from the original plan, except that provision is made, under the amended plan, for the construction of a central drainage canal along the trough of the basin to intercept the storm water and seepage of the lateral drainage ditches and conduct it to the pumping plant, which is to be located at the southerly end of the basin on the bank of Sacramento slough. The central drainage canal will be excavated with a clam-shell dredge, prior to the completion of the exterior levees, and will be made of ample capacity to drain the entire district of all seepage and storm water.

The levee system throughout will be constructed with clam-shell dredges and made to conform to a height of 5 ft. above the adopted flood plane. Levees will have a crown width of 10 ft. with a side slope of 3½ ft. horizontal to 1 ft. vertical on the water side, and a side slope of 2 ft. horizontal to 1 ft. vertical on the land side. The width of berm between the edge of the dredge cut and the outer toe of the levee will be 22 ft. The depth of the dredge cut, generally, shall not exceed 12 ft., the side slopes of the dredge cut to be 1½ ft. horizontal to 1 ft. vertical. The tract east of the drainage canal comprises about 33,000 acres and borders on the Feather river. The tract to the west comprises about 28,000 acres and borders on the Sacramento river. The balance of the acreage is in the by-pass area.

The principal factors in the plan of reclamation consist in the construction of levees as a protection against overflow from floodwaters; the construction of pumping plants for the disposal of seepage and rain-water; the construction of drawbridges in either end of the railroad trestle across the by-pass to permit passage of boats and dredges; the construction of drainage ditches; and the construction of wagon-roads and culverts. The proposed plan of reclamation conforms in general with the Government's flood-control plan as regards the width of by-pass channel, height of by-pass levees, height of the Sacramento River levee from Knights Landing to a point opposite the proposed Fremont weir, and the height of the Feather River levee from its junction with the Sacramento river to Nelson slough, the elevation of

BUILDING A LEVEE WITH DRAG-LINE EXCAVATOR.

Generated on 2024-09-30 00:18 GMT / https://hdl.handle.net/2027/uiug.30112007837898
Public Domain, Google-digitized / http://www.hathitrust.org/access_use#pd-google
Digitized by Google
Original from UNIVERSITY OF ILLINOIS AT URBANA-CHAMPAIGN

the crown being 5 ft. above the proposed high-water plane; though the crown width of these levees has been fixed at 16 ft., rather than 10 ft. as proposed in the Government's plan. The increased width is deemed advisable as a safeguard against wave wash. The side slopes of these levees have been fixed at 3:1 on the water side and 2:1 on the land side.

The plan of protection along the Sacramento river from Knights Landing to Carnmore Landing, near the north line of the district, consists in repairing the present levee and increasing its height to an elevation of 5 ft. above the flood plane of 1907 and providing a crown width of 10 ft. with side slopes of 2:1. The plan further consists in constructing a levee in a southeasterly direction from a point near Cranmore Landing on the Sacramento river, to its intersection with the westerly levee of the by-pass; providing a crown width of 16 ft. with side slopes of 3:1 on the water side and 2:1 on the land side and providing a height of 5 ft. above the proposed high-water plane; constructing a levee along the north line of the proposed district from the levee on the easterly side of the by-pass to the southwest corner of Levee District No. 1; providing a crown width of 16 ft. with side slopes of 3:1 on the water side and 2:1 on the land side, with an elevation of 5 ft. above the proposed high-water plane; and facing the slope on the water side with cobbles to prevent wave wash.

Repairing the south levee of Levee District No. 1 from the southwest corner of said district to the Southern Pacific Railroad embankment, by increasing the present levee to an elevation of 5 ft. above the proposed high-water plane; providing a crown width of 10 ft. with side slopes of 2:1; enlarging the Southern Pacific Railroad grade, from the southerly line of Levee District No. 1 to Nelson slough, by increasing the height of the embankment to an elevation of 5 ft. above the proposed high-water plane; and providing a crown width of 12 ft. with side slopes of 2:1.

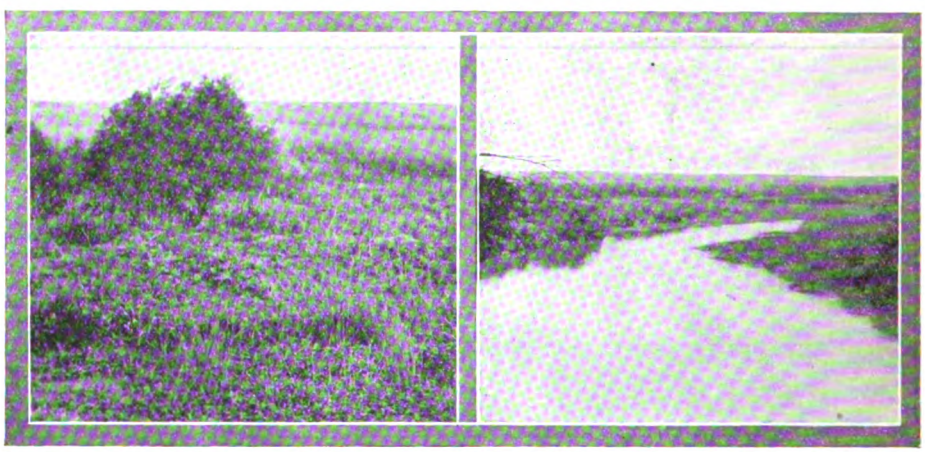

VIEWS SHOWING TYPE OF LAND INCLUDED IN THE PROJECT.

The majority of the foregoing levee work is proposed to be constructed with clam-shell dredges, though a portion of the work will have to be constructed by other means. In the construction of all levees, except the Sac-

Generated on 2024-09-30 00:17 GMT / https://hdl.handle.net/2027/uiug.30112007837898
Public Domain, Google-digitized / http://www.hathitrust.org/access_use#pd-google
Digitized by Google
Original from UNIVERSITY OF ILLINOIS AT URBANA-CHAMPAIGN

ramento River levee, it is proposed to remove a sufficient amount of earth material from the land side of the levees to provide drainage canals for the disposal of seepage and rain-water, the amount of material removed being charged to levee construction rather than to drainage.

Provision for disposal of seepage and rain-water consists of separate pumping plants for the easterly and westerly tracts; the pumping facilities to consist of electric-driven centrifugal pumps, complete with modern equipment, enclosed in reinforced concrete buildings, and supported by concrete pile foundations. The plants are to be located at the lowest points in their respective tracts, adjacent to the by-pass levees. The plants will have their suctions in basins, into which the drainage canals flow, and will discharge over the by-pass levees into the dredge cuts on the inside of the by-pass.

The equipment of the plant for the easterly tract will consist of seven 40-in. centrifugal pumps direct connected to electric motors. The plant will have a combined pumping capacity of 311,000 gal. per minute against a head of 28 ft., including friction, requiring 3050 aggregate horse-power when working at full capacity.

The equipment of the plant for the westerly tract will consist of six 40-in. centrifugal pumps, direct connected to electric motors. The plant will have a combined capacity of 267,000 gal. per minute against a head of 28 ft., including friction; requiring 2615 aggregate horse-power when working at full capacity.

The plan provides for the construction of two modern steel draw spans, each 80 ft. in the clear, to be located in the Southern Pacific Railroad trestle where it crosses the dredge cuts in the by-pass, to be used for the passage of boats and dredges. The plan of drainage for the easterly and westerly tracts consists of main drainage canals extending along the land side of the levee system, from which main lateral ditches, at intervals of one mile, will extend east and west to intercept the small lateral ditches, one-half mile apart, extending north and south between the main lateral ditches. The canals and ditches are designed for a capacity sufficient to discharge all storm water, under a maximum rate of rainfall, with a surplus capacity for seepage water. In the construction of the main and small laterals, it is proposed to make use of modern mechanical implements.

The following table has been compiled, showing the estimated costs:

PRELIMINARY ESTIMATE OF COST OF PROPOSED RECLAMATION

Earthwork	$ 953,691
Purchase of lands for levees, berms, and dredge cuts	68,980
Purchase of lands in waterways	91,365
Clearing land for dredge cuts, levee bases, and berms	4,051
Clearing land for waterways	30,000
Purchase of land for central drainage canal	10,000
Cost of constructing central drainage canal	58,059
Riprap facing on north levee	72,000
Pumping plant	215,000
Lateral drainage system	36,000
Drawbridge in railroad trestle	10,000
Wagon-roads and culverts	10,000
Launch, automobile, and building	10,000
Estimated cost	$1,569,146
Engineering, surveying, inspecting, and contingencies, 10%	156,915
Cut-off on Feather river	5,250
Total cost of construction	$1,731,311
Interest charges (one-half of three years at 6%)	155,818
Total cost of reclamation	$1,887,129

The proposed system of roads includes a north and south road through

Generated on 2024-09-30 00:17 GMT / https://hdl.handle.net/2027/uiug.30112007837898
Public Domain, Google-digitized / http://www.hathitrust.org/access_use#pd-google
Digitized by Google
Original from UNIVERSITY OF ILLINOIS AT URBANA-CHAMPAIGN

the easterly and westerly tracts, a road along each side of the by-pass adjacent to the main drainage canals, and two east and west roads extending across the easterly and westerly tracts. Roads are to be 16 ft. in width, 1 ft. above surface of adjacent ground so as to provide proper drainage, and will be constructed with modern road-building machinery. Where practicable, the earth removed in the construction of main and small lateral ditches is to be used in building the roads.

The proposed Fremont weir when completed will carry off the water from near the mouth of the Feather river. The work proposed to be done at the mouth of the Sacramento river has begun. The widening of Cache slough, above Rio Vista, is also part of the comprehensive plan of flood control for the improvement of Sacramento valley.

Progress in the Cat Canyon Oilfield

By HOWARD D. SMITH

DESPITE the presence of thick oil-bearing sandstones at workable depth, economic production is not always obtained, and for a while it seemed that this was to be true of the Cat Canyon field, in Santa Barbara county, California. Upward of eighteen months have been spent in drilling wells which finally were abandoned, not, as is the case with most holes in the ground, owing to lack of valuable material, but to mechanical difficulties. In some cases, because of good luck rather than particular skill, a few wells have gushed a considerable amount of oil, but the greater number thus far sunk in the known good territory have been failures.

Fortunately, the present managers of an English company, the Santa Maria Oilfields, Ltd., have found the way through many difficulties to success. This has been due not so much to original methods as to intelligent procedure based on knowledge available through the dearly bought experience of others. Such experience is too often disregarded by oil operators who are frequently inclined to look askance on methods that do not originate with themselves.

The oil in the Cat Canyon field is extremely viscous, and there are numerous mechanical difficulties to be met in bringing in a well. The following

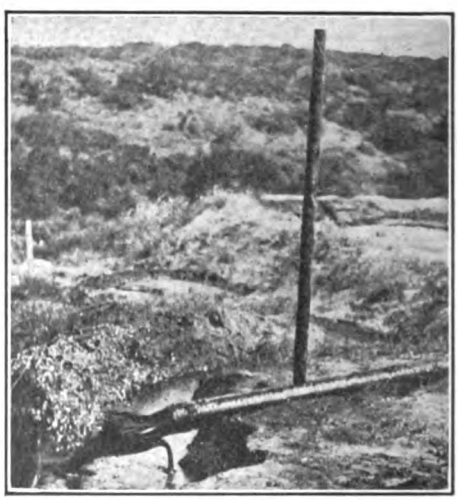

SANTA MARIA WELL No. A-1, PRODUCING ABOUT 1000 BARRELS DAILY.

Generated on 2024-09-30 00:17 GMT / https://hdl.handle.net/2027/uiug.30112007837898
Public Domain, Google-digitized / http://www.hathitrust.org/access_use#pd-google
Digitized by Google
Original from UNIVERSITY OF ILLINOIS AT URBANA-CHAMPAIGN

log is of well No. 7. The conditions encountered herein may be taken as roughly typical of the proved territory:

Santa Maria Oilfields, Ltd.

WELL No. 7.

CASING.	Feet.
Wooden conductor	49
Stove-pipe, 16½ in.	456
Liner, 15 in.	505
Casing, 12½ in.	1312
Casing, 10 in.	2395
Casing, 8 in.	2980

Casing, 6 in., landed at 3083 ft.; 300 ft. left in hole; 112 ft. perforated.

Tar sand and gas	20	2345
Brown shale	10	2365
Blue shale	20	2375
Hard shell	5	2395
Blue shale	200	2400
Hard shell	2	2600
Blue shale	33	2602
Hard shell	1½	2635
Blue shale	323½	2636½
Oil sand	20	2960
Hard oil sand	5	2980
Soft sand	99	2985
Blue-gray sticky shale	..	3083

Commenced on June 23, 1912.
Completed on November 3, 1912.

Production has averaged, since com-

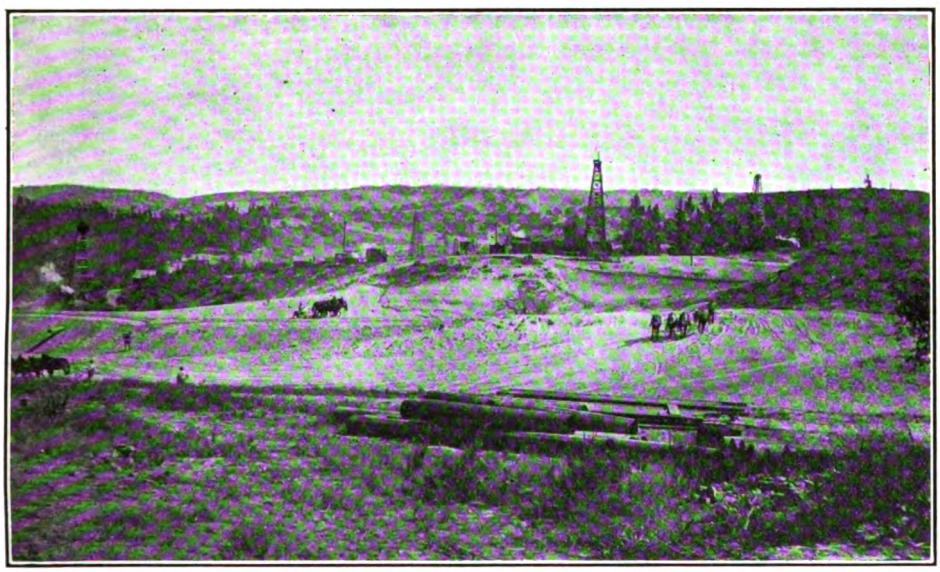

MAKING AN EARTHEN RESERVOIR, CAPACITY AB OUT 400,000 BARRELS.

FORMATION.

	Feet.	Depth, ft.
Sand	200	....
Running sand	40	200
Sandy clay	30	240
Coarse sand	180	270
Water sand	30	450
Blue clay	30	480
Hard sand	40	510
Blue sand	70	550
Blue clay	345	620
Brown shale	335	965
Blue shale	150	1300
Brown shale	730	1450
Gas and sand	10	2180
Brown shale	155	2190

ing in, about 600 bbl. per day; production May 1 was 700 bbl. per day. The good time made on this well was due in large part to drilling from 500 to 1300 ft. an open hole, using a very stiff mud through which tools would just fall. After passing through loose sand streaks with stove-pipe, 12½-in. casing was put in and carried down to the first bed of blue clay and cemented; the 10-in. casing being carried to the 'hard shell' and cemented. Much has been said about care in cementing, but an excess of precaution, if such a

Generated on 2024-09-30 00:17 GMT / https://hdl.handle.net/2027/uiug.30112007837898
Public Domain, Google-digitized / http://www.hathitrust.org/access_use#pd-google
Digitized by Google
Original from UNIVERSITY OF ILLINOIS AT URBANA-CHAMPAIGN

thing is possible, is necessary in this field. Eight-inch casing is carried to hard sand just above oil-sand.

The gravity of the Cat Canyon oil, being in many cases under 12°B., water striking the oil-sand seems to 'kill' it. Drilling in with 'oil open hole' prevents the forming of a mass of hardened asphaltic oil and sand, practically impossible to deal with. As heavy oil as possible is used, the sand in this field standing up well. After the oil-sand has been drilled through, 6-in. casing is lowered in the hole with perforated section in the oil-sand, and production begun.

Great difficulty formerly came about when casing was carried down with the drill and water was used, owing to movement of the sand and great back-pressure. It has been ascertained that, due to the absorption of oil by the oil-sand, very little gas is formed until pumping begins on completion of the well. Another serious trouble with this heavy oil is the difficulty of transportation resulting from its high viscosity caused by a high sulphur content of about 45%. This is overcome by heating oil at pump stations of pipe-lines or by steam coils in cars.

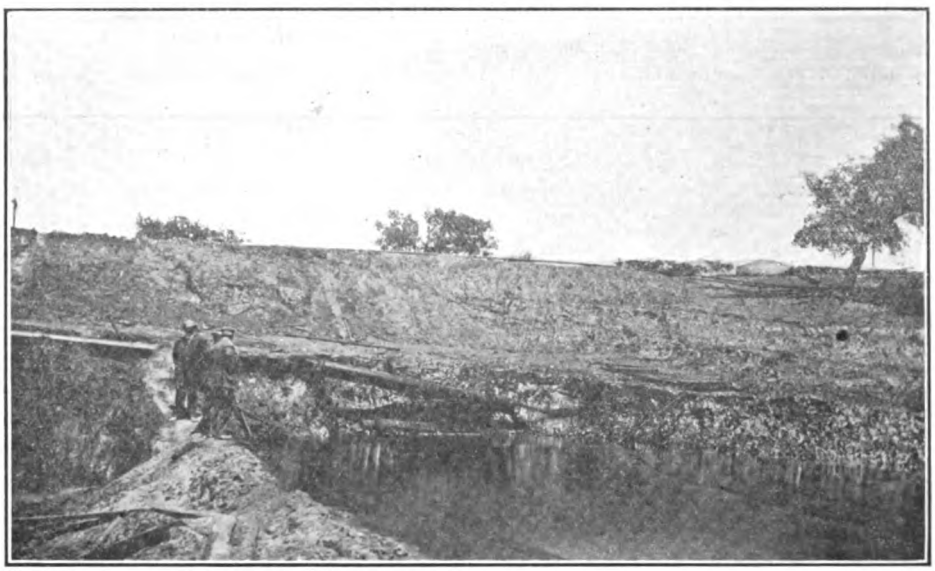

PALMER WELL No. 2, PRODUCING FROM 8000 TO 10,000 BARRELS DAILY.

A topping plant is now operating successfully on oil of about 10.5°B., making a 90% liquid asphalt, which is applied to roads at a temperature of 300° F., and at the present time is considered the most valuable product for road-making purposes.

Generated on 2024-09-30 00:21 GMT / https://hdl.handle.net/2027/uiug.30112007837898
Public Domain, Google-digitized / http://www.hathitrust.org/access_use#pd-google
Digitized by Google
Original from UNIVERSITY OF ILLINOIS AT URBANA-CHAMPAIGN

Cost of Reporting on an Irrigation Project

By CHARLES KIRBY FOX*

DURING 1911-12 I was employed to make the surveys and estimates for an irrigation project. Careful records were kept of the time and cost of each item pertaining to the work. All told, the project covers 70,000 acres, of which a part is already irrigated and some of it does not require irrigation. We prepared preliminary plans for irrigating 80% of the unirrigated arable land or 40,000 acres. As a rule, the land was fairly smooth and for the greater part covered with sagebrush about waist high.

On account of the distances from trade centres, it was necessary in making the designs and estimates to provide for using as much local material as possible and minimize the quantity of materials shipped in from the outside. The approximate estimates follow:

Excavation, 800,000 cubic yards.
Tunneling, 5800 lineal feet.
Lumber, 830,000 ft. board measure.
Iron and steel, 500 tons.
Main and diversion canals, total, 61 miles.
Laterals, 144 miles.

There will be approximately 2⅔ miles of flume and a little over ½ mile of siphons in the system.

Outside of the engineering crew, local men were used. It was necessary with the greater part of the work to establish camps. These were, as a rule, 10 to 20 miles from the adjacent towns. Chainmen and rodmen were paid $40 to $50; cooks, $60 to $70; level-men, $75 to $85; instrument men, $90 to $110; draftsmen, $75 to $150; and assistant engineers, $100 to $150. All rates given are by the month, and include board and expenses. About 10,000 meals were served in camp at a cost of 28c. each, segregated as follows:

	Cents.
Food	21
Cook	6
Incidentals	1
Total	28

It was necessary to use canned goods almost exclusively. The cost of provisions was very high. The meals were excellent. Horses were hired, at a cost usually of about $1 per day, including feed.

Water Shed and Irrigation.—Owing to the inaccuracy of the existing maps, it was necessary to make a careful reconnaissance and triangulation of the water-shed. This embraces a territory approximately 25 by 30 miles. At the time this work was done, there was considerable snow on the ground and it was often smoky or hazy. Eighteen stations were used. An assistant engineer and rodman and two horses were used on this work. To place the stations, triangulate them, and plot the work cost $35 per station. Eight and one-half days time was put in on each station.

Sounding Lake and Contouring Reservoir Site.—In sounding a 3000-acre

*Consulting Engineer, Pomona, California.

Generated on 2024-09-30 00:25 GMT / https://hdl.handle.net/2027/uiug.30112007837898
Public Domain, Google-digitized / http://www.hathitrust.org/access_use#pd-google
Digitized by Google
Original from UNIVERSITY OF ILLINOIS AT URBANA-CHAMPAIGN

lake it was necessary to cut over 1000 holes through 13 inches of ice. A party consisting of a transit man, two chainmen, two axe-men, and two horses were used. In contouring 4000 acres around the lake the same party was used, except that a recorder and three stadia men were substituted for the chain and axe-men. The sounding and contouring cost 6.4c. per acre.

The high-water line of the reservoir was run before I arrived. I understand that it cost about $50 per mile for 16 miles of exterior line. This includes ties to the section corners.

Section Lines.—Approximately 200 miles of section lines were re-run. Great difficulty was experienced in finding some of the corners. It is thought that between one-fourth and one-fifth of the time was spent in looking for old corners, and the work was greatly delayed by storms. The party consisted of an instrument man, two chainman, two flagmen, a teamster, four horses, and a cook. The work cost $10 per mile. It might be worth noting that on lines which were re-run, only one corner has been found that the original party did not locate. Some 60 corners were replaced at odd times at a cost of $2.50 per post.

Leveling.—The section line party was followed by a level party (levelman and rodman), which set bench marks every half mile or mile. They ran 150 miles at a cost of $2.50 per mile.

Contouring.—The entire area under the ditch-line was contoured at a cost of 5c. per acre. Five-foot contour intervals were used on the flattest sections and 10-ft. on the steeper parts. It was platted on a scale of 1000 ft. to the inch. The party consisted of an instrument man, recorder, and two to four stadia men. Usually two parties were in the field under my supervision, with a draftsman, cook, one or two teamsters, and six horses. After the fieldwork was completed it took almost as much time to reduce and plat the transit stadia notes as it did to do the fieldwork. If I had the work to do again, I would try a plane table, as I believe cheaper and better work could be done by this means.

Cruising.—First the real estate department had a man cruise the land and plat it on a scale of 6 in. to the mile. This cost 2c. per acre. Later, after the contouring had been completed, I had each section traced on a letter-size sheet of tracing cloth on a scale of 1000 ft. to the inch. Two of us, mounted, could cover about ten sections per day checking the old cruising notes, sketching in all new fences, houses, clearings, etc. This cost a little more than the first cruising. It was thought advisable to make a rough cultural and property map of the valley now under cultivation so as to have an idea of the amount of hay and grain available. Two men on foot could cover about 10,000 acres per day. Office work took about the same time.

Canal Line.—With a view to determining the most economical location of the canal line, we ran a low line 39 miles long and a high line 20 miles long, and made a careful reconnaissance of the remainder. From these studies we determined that the high line would be cheapest. The lines were run by the following party: chief, draftsman, transit man, stadia man, flagman, axeman, level man, rodman, teamster, four horses, and a cook. It cost $16 per mile to do this work.

We then started out with practically the same outfit except that two chainmen were added. The distance per shot on the preliminary line was about

Generated on 2024-09-30 00:21 GMT / https://hdl.handle.net/2027/uiug.30112007837898
Public Domain, Google-digitized / http://www.hathitrust.org/access_use#pd-google
Digitized by Google
Original from UNIVERSITY OF ILLINOIS AT URBANA-CHAMPAIGN

400 feet. All the work was on the side-hill. When contouring was commenced the party was divided.

On the transit line we set stakes every 100 ft., and took the elevation at each station. We then took very careful topographic data, usually covering 30 to 40 ft. in vertical elevation by 5-ft. contours, which were platted in the field to a scale of 200 ft. to the inch. We were very careful to note all rock outcrops or other characteristics which would influence the final location of the line. We ran 61 miles of these lines at a cost of $30 per mile for the transit and level line, and $20 per mile for the topography. The cost of the ties to the section corners is included in the cost of the transit and level line.

Paper Location and Estimate.—The office work was done in the winter with a small force consisting of myself, an assistant engineer, a draftsman or two, and a blueprint boy. I had the assistant engineer and a draftsman spend a month to work up a special set of excavation tables especially adapted to side-hill canal lines. They gave the balanced cut and fill, the yardage, and the centre cut for each different side slope. I estimate that by the use of these tables we saved several hundred dollars per mile on the excavation at a cost of less than 1% of the amount saved. The estimate cost $16 per mile or approximately 2/3 of 1% of the cost of the excavation.

Field Notes and Maps for Filing.—The tracings included six sets (34 sq. ft.) of three maps each, and the field notes required 146 pages of legal size paper. All courses were balanced in connection with the section line survey. The office work cost $500, or about $6.50 per mile of canal and reservoir.

Designs and Estimates for Structures.—It is estimated that the structures, flumes, siphons, outlets, etc., will cost about $100,000. The designs and estimates cost 2% of the estimated cost. Usually several types of structures were sketched out and estimates made for each type. These detailed drawings were made according to what appeared to be the best type, and included a complete estimate of the cost, including quantities, weights, etc. The difference in the cost of several types of structures, all of which appear suitable, is surprising.

It cost a little less than 1% to make the surveys, designs, and estimates of the rockfill dam and tunnels. Enough money will be saved on changing the damsite from the location selected by the promoters to pay the entire cost of the work. The laterals were laid out on the contour map and only a few of the larger ones were run out. The designs and estimates for the laterals cost about $2 per mile. The entire report with the specifications, etc., contained about 250 pages and 100 blueprints.

General Expenses.—The stenographic and clerical expenses amounted to approximately $400, the general expenses about $800, and approximately $1000 was spent on hydrographic work. All told, this survey cost approximately $20,000, or 50c. per acre, or 3 to 4% of the estimated cost of the work. About 4000 man-days were worked at an approximate cost of $5 per man-day.

Generated on 2024-09-30 00:19 GMT / https://hdl.handle.net/2027/uiug.30112007837898
Public Domain, Google-digitized / http://www.hathitrust.org/access_use#pd-google
Digitized by Google
Original from UNIVERSITY OF ILLINOIS AT URBANA-CHAMPAIGN

Reinforced Concrete Pontoons for a Floating Boathouse

By D. C. FINDLAY*

THE presence of the teredo in salt sea water renders the life of wood, as used for supporting floating boathouses, very short. Steel pontoons also require a special surface coating and frequent inspection to insure their not being corroded by the salt water. In the design of the modern boathouse described below, concrete was used for the novel purpose of building the pontoons, as it is unaffected by teredos or corrosion if properly constructed.

Fig. 1 shows the outside form assembled and the reinforcing in position. The walls and floor are only 2½ in. thick, and consequently the design and installation of the reinforcing required great accuracy and care. Half-inch square bars were carefully bent to the shape of the shell and carried along the bottom and up the sides. These bars were spaced about 18 in. centres. At the ends, longitudinal ½-in. bars had eyes turned on the ends accurately to fit the ½-in. vertical bars, and one of which was driven down with a sledge until it was 1 in. from the bottom on each side. A second bar was placed at the top on either side and across the ends. This formed a rigid skeleton steel frame of interlocked bars which could not be displaced, and afforded support for fastening the intermediate bars in position. On this framework was carefully spread No. 26

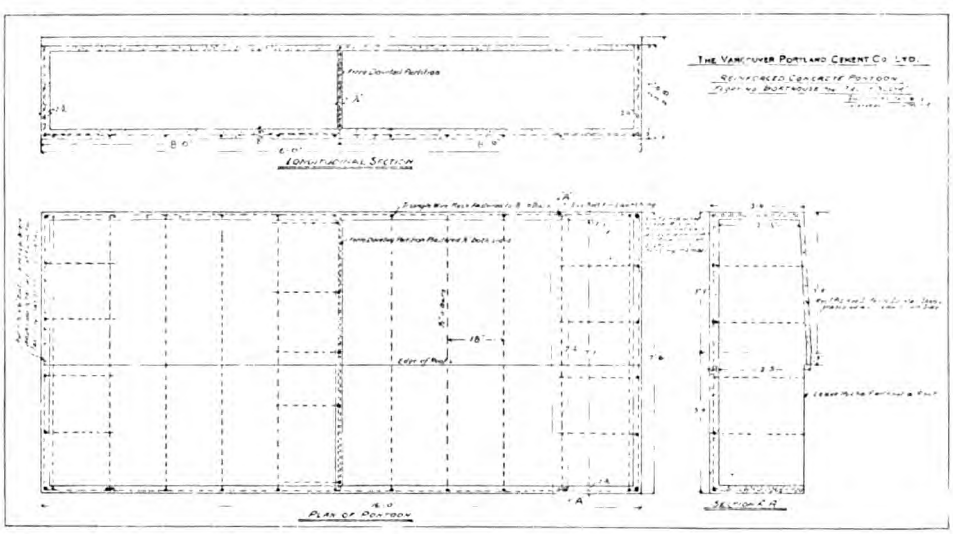

GENERAL ARRANGEMENT OF PONTOON.

*Chief Engineer, Vancouver Portland Cement Co., Ltd., Vancouver, B. C.

Generated on 2024-09-30 00:18 GMT / https://hdl.handle.net/2027/uiug.30112007837898
Public Domain, Google-digitized / http://www.hathitrust.org/access_use#pd-google
Digitized by Google
Original from UNIVERSITY OF ILLINOIS AT URBANA-CHAMPAIGN

triangle wire mesh. The lengths were cut and formed so as to run continuously along the bottom longitudinally and up the two ends. The sides were treated likewise and the wire mesh carefully wired at every intersection with the ½-in. bars. At about 20 in. from each end a special reinforcing bar had an eye welded on each end, and projecting above the top of the finished side wall. This enabled chain

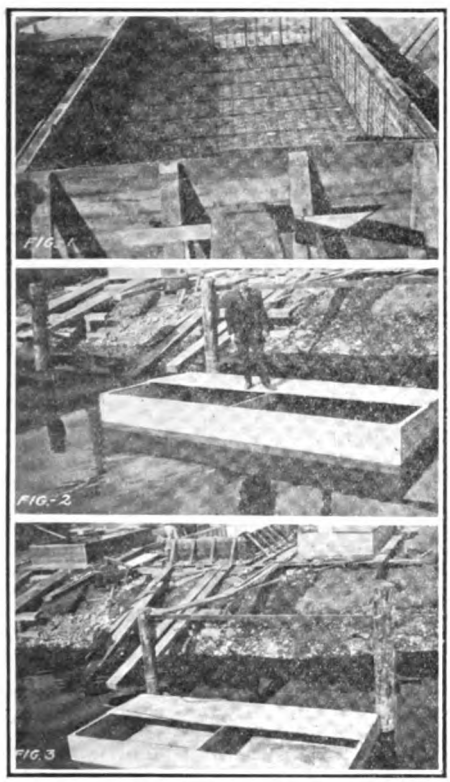

OUTSIDE FORM ASSEMBLED.
FINISHED PONTOON AFTER LAUNCHING.
PONTOONS IN VARIOUS STAGES OF CONSTRUCTION.

blocks to be attached for launching and furnished a means of attaching ropes for towing to the site of the boathouse.

The boathouse itself is 100 ft. long by 27 ft. wide, and has a clear height of 17 ft. 6 in. to the bottom of the roof truss. Calculations of the weight of this building determined the most economical size of pontoon to be 16 ft. long by 7 ft. 6 in. wide and 30 in. deep.

Fig. 2 shows one of the finished pontoons in the water after launching. A centre partition was built into the side walls and floor, and consisted of 'ferro-dovetail' sheets with their ends projecting 1½ in. into the walls and plastered with concrete on both sides. This stiffened the walls and made two separate water-tight compartmens. For attaching the sills of the boathouse, ¾-in. bolts threaded at the ends were set in the concrete about 3 in. off the centre of the pontoon, to which the 6 by 8-in. sills of the boathouse were bolted. This offset was calculated to be sufficient to offset the extra weight of the roof slab and cause the pontoon to float true in the water.

It will be noticed that the roof slab extends on one side only, and the end walls were cast with a 2-in. fall from the centre. This portion of the pontoon is outside the building line, and the roof sheds the rain. The roof is made of 'ferro-dovetail' sheets, ⅝ in. depth of groove, resting on the centre partition wall and fastened to the ends and side by ⅜-in. carriage bolts which were placed in the green concrete. Both top and bottom of the sheets were then plastered with a 1 : 2 mixture, and the finished roof slab was only 1¼ in. thick, but of remarkable strength and absolutely water-tight.

In order to get all the buoyancy possible, as much weight as possible had to be eliminated. As constructed, the pontoons weighed about 8000 lb., and, on launching, floated to within ¼ in. of calculated water-line. Each pontoon supports a live load of 7800 pounds.

The boathouse has eleven pontoons under it, five on each side and one on

Generated on 2024-09-30 00:21 GMT / https://hdl.handle.net/2027/uiug.30112007837898
Public Domain, Google-digitized / http://www.hathitrust.org/access_use#pd-google
Digitized by Google
Original from UNIVERSITY OF ILLINOIS AT URBANA-CHAMPAIGN

the forward end, while the other end of the building, containing the large swinging doors, was tied together by a 1½-in. iron bar attached by galvanized bolts to the top of the pontoon and passing between guide bolts set in the bottom, so as to distribute the load in a vertical plane. The horizontal part of the tie rod was 6 ft. below water, allowing the yacht to pass over it in entering the boathouse. Fig. 3 shows the pontoons in various stages of construction, and Fig. 4 the finished building.

The boathouse is rigidly built and braced, and the roof supported by trusses, both roof and walls being covered with a special V-crimp galvanized-iron with a paneled lattice running around the entire building.

Fig. 5 shows an interior view with the walks around either side. Manholes in the floor allow inspection of the inside of the pontoons, which are used for storing light material used about the yacht. The boathouse is held in position at one end by a reinforced-concrete pile 24 in. square, and at the other end by a floating boom attached to the shore. A floating fender attached to the sill by spreaders was installed to prevent the yacht from ramming the pontoons in making a landing alongside the boathouse.

Landings are provided at the entrance to facilitate boarding the yacht. One end of the front of the boathouse is partitioned off for a room for the captain. The entire building is lighted and heated by electricity, and has fresh water piped all over for quickly filling the yacht's tanks and for cleaning purposes. In constructing the pontoons, three casting floors were built on the beach, of shiplap, and carefully leveled.

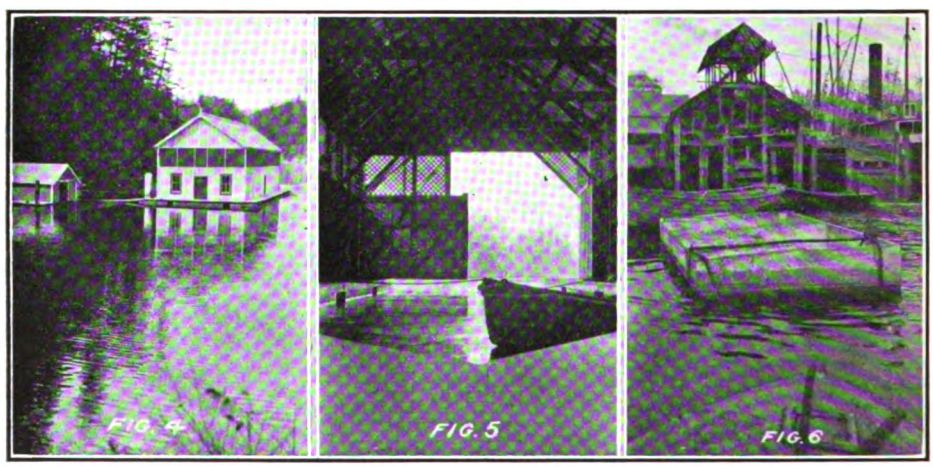

FINISHED BUILDING. INTERIOR OF BUILDING. TOWING PONTOON.

These served as forms for the bottom of the pontoon. Two sets of collapsible wood forms were then made up, and were used over fifteen times in all. The outside forms were first set up and the reinforcing carefully placed and supported from the bottom by small concrete blocks which were cast into the floor. The floor was then poured, using a wet mixture of 1 part cement, 2 parts sand. This covered the steel completely and was thoroughly tamped to fill all the voids.

A mixture of 1 part cement, 2 parts sand, and 1 part screened gravel of

Generated on 2024-09-30 00:20 GMT / https://hdl.handle.net/2027/uiug.30112007837898
Public Domain, Google-digitized / http://www.hathitrust.org/access_use#pd-google
Digitized by Google
Original from UNIVERSITY OF ILLINOIS AT URBANA-CHAMPAIGN

½-in. maximum size was then poured on top and brought to a depth of 2½ in. The collapsible inside form was then quickly set in place and braced into alignment, and the concreting of the walls continued without interruption. Great care was used in the mixing, and especially tamping the thin walls to assure the steel being thoroughly enclosed and all air expelled. Most gratifying results were obtained as, of fifteen pontoons built, not one showed any indications of dampness of any sort when launched, and they have been in the water now for nearly nine months.

Forms were stripped in about thirty-six hours and allowed to season till thoroughly set. Then a frame was placed over each end, chain blocks were used to lift the pontoon clear of the floor, and launching timbers 10 by 14 in. were placed under on rollers. At high tide the pontoon was about 6 ft. above the water. An incline runway was built extending into the water and a temporary roof built over the open side of the pontoon to prevent shipping water on launching. Two men with bars easily pushed it off the floor and it took the water very easily. A motor-boat then took it in tow (see Fig. 6) for about a mile to the site of the boathouse, where it was assembled.

Accurate account was kept of the cost, which, including launching, for each pontoon was as follows:

Labor	$54.35
Steel reinforcement	6.50
Sand and gravel	3.75
Cement	17.15
Total	$81.75

Labor is charged at 50c. per hour except mixing the concrete, which was done by Chinese at 18c. per hour. Cement is charged at $2.45 per barrel.

Considering their indestructibility, they are far superior to anything else and prove that concrete itself, if well placed, is a sufficient waterproofing agent, as no waterproofing was used in the concrete.

The pontoons and boathouse were designed and built under my direction for R. P. Burtchart.

Cost of Pumping Oil by Electricity in the California Oilfields

By S. G. GASSAWAY

SOME three years ago, when the power company began the construction of an extensive and elaborate network of transmission lines and sub-stations in the oilfields, the oil operator began to 'sit up and take notice.' When some of the larger oil companies equipped their wells with electric motors, he began to 'figure' how they could afford to pay real money for electric power when barrels of fuel oil and, in some cases, a quantity of gas was available at their very doors for generating steam for pumping. For years the operators had burned fuel oil for pumping, and it seemed rank extravagance to spend money for the 'new-fangled' power

Generated on 2024-09-30 00:19 GMT / https://hdl.handle.net/2027/uiug.30112007837898
Public Domain, Google-digitized / http://www.hathitrust.org/access_use#pd-google
Digitized by Google
Original from UNIVERSITY OF ILLINOIS AT URBANA-CHAMPAIGN

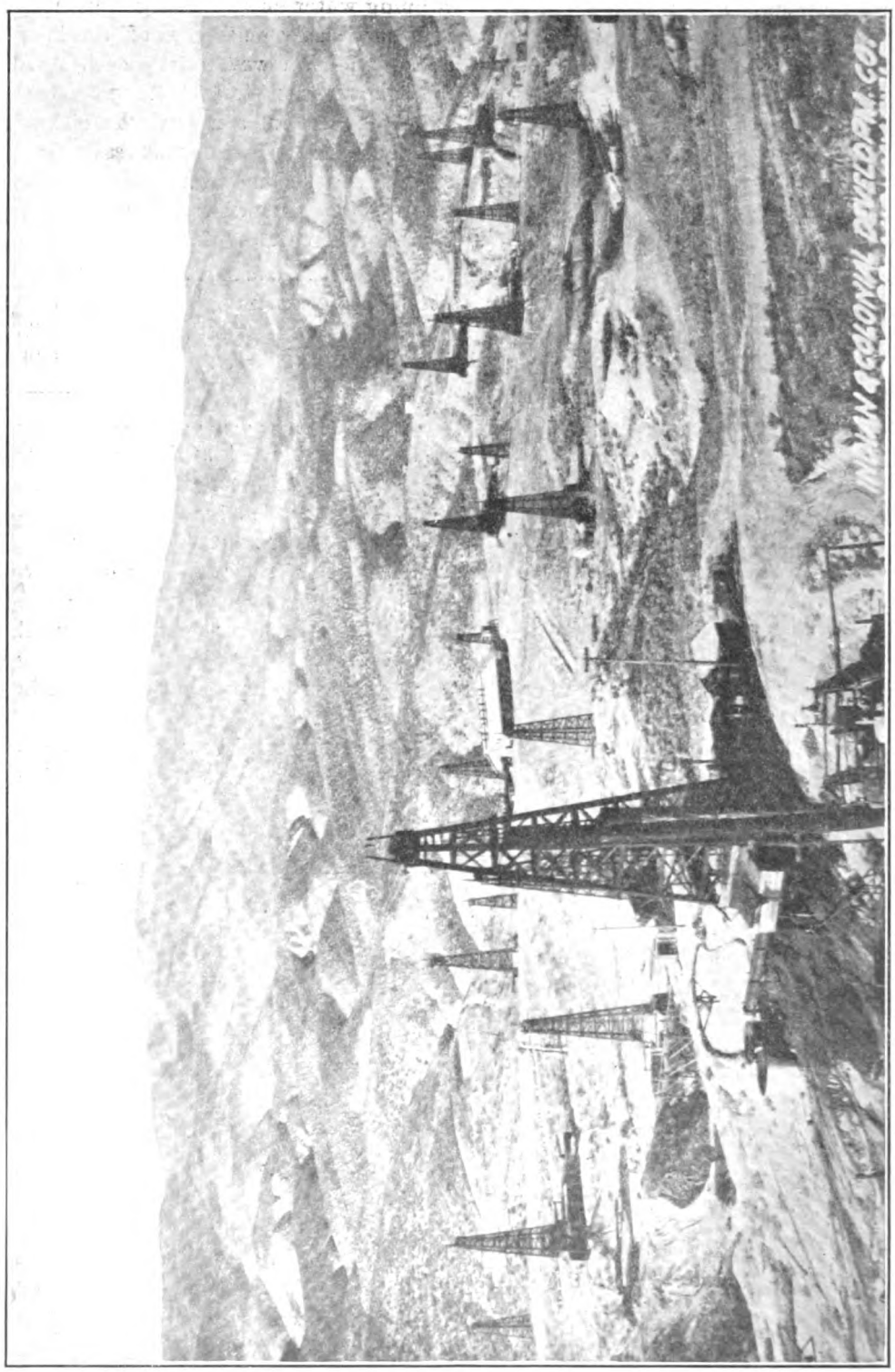

INDIAN AND COLONIAL DEVELOPMENT CO. PROPERTY, MIDWAY FIELDS, CALIFORNIA, WHERE ELECTRIC PUMPING IS USED EXCLUSIVELY.

Generated on 2024-09-30 00:18 GMT / https://hdl.handle.net/2027/uiug.30112007837898
Public Domain, Google-digitized / http://www.hathitrust.org/access_use#pd-google
Digitized by Google
Original from UNIVERSITY OF ILLINOIS AT URBANA-CHAMPAIGN

when they could generate power from fuel oil or gas which cost them nothing.

During an investigation of the operating costs of some one hundred oil producers, it was found that the operator who charged to operating expense the market value of the fuel oil consumed was an exception; in many cases no accurate measurement of the quantity burned was kept, and in some few instances no account whatever of the fuel oil consumed was taken. This 'system' of accounting would perhaps give a severe shock to the modern efficiency expert, but really is no more than natural; for why should the producer, who already has his mind full of drilling and production troubles, worry about the number of barrels of fuel oil burned or its cost, when no actual money was paid out and it had to be burned anyway?

The introduction of electricity in the fields, however, set the oil operator to thinking. He soon learned that the electric motor saved water bills; boiler troubles were reduced to a minimum or entirely done away with; less lubricating oil was used, and considerable labor dispensed with. Production could be increased, not only by the saving in fuel oil, but because the motor gave a steadier motion to the pumps and the number of strokes would remain unchanged after the first setting. The speed of pumping would not change due to variations in steam pressure or lack of steam. Besides the saving in machinery, pump rods, boilers, etc., the wear and tear of the operator's peace of mind was considerably reduced, and he and his men could give more of their time to production, the 'meal ticket' of an oil property.

Upon investigating the operating conditions of the properties referred to, the costs of operation were found to vary widely, because of greatly diversified conditions. Where similar conditions were encountered, however, it was surprising to note how very closely the costs checked. The principal factors entering into operating cost are: depth of well, quantity and rate of production, size of pump, distance between wells, number of wells operated, and the gravity of the oil. This last condition not only affects the amount of power required to pump the well, but also affects the quantity of oil necessary for fuel, the use of light oil for fuel requiring a greater quantity than the heavy oil for the same steam generation. Since pumping by electricity has increased so extensively, however, cost data have been acquired affording interesting comparisons.

Depending upon the conditions mentioned, to pump an oil well requires about as follows:

With Steam

Fuel oil, 3½ to 10 bbl. per well per day.

Water, 25 to 80 bbl. per well per day.

Lubricating oil, waste, packing, etc., 15c. to 75c. per well per day (the higher figure for gas-engines).

Repairs to boilers and engines, 20c. to 40c. per well per day.

With Electricity

Electric energy, 70c. to $2.50 per well per day.

Water, 1 to 20 bbl. per well per day.

Lubricating oil, 1c. to 3c. per well per day.

Repairs to motors, transformers, transmission lines, 3c. to 6c. per well per day.

In the above, nothing has been said of labor. This cost varies greatly, even with the same set of conditions of well-depth, speed, spacing, production, etc. In general, one pumper can look after from eight to twelve gas or steam engines and from fifteen to twenty mo-

Generated on 2024-09-30 00:19 GMT / https://hdl.handle.net/2027/uiug.30112007837898
Public Domain, Google-digitized / http://www.hathitrust.org/access_use#pd-google
Digitized by Google
Original from UNIVERSITY OF ILLINOIS AT URBANA-CHAMPAIGN

tors. The comparative data of steam and electric operation below are the actual comparative operating costs averaged over a period of several months for properties pumping 8, 12, and 107 wells, respectively. Also the electric energy costs only are given of two other properties with 62 and approximately 110 wells, respectively. These figures are all for wells 'on the beam' and operated by individual motors.

Pumping 8 Wells, Depth 1000 to 2800 Feet

STEAM OPERATION

	Sept. 1912.	Oct. 1912.
Water	$ 449.99	$ 457.83
Fuel @ 50c	469.00	305.50
Labor	448.00	448.00
Boiler compound, lubricating oil	30.00	30.00
Total	$1396.99	$1241.33

Average per month, $1319.16.

ELECTRIC OPERATION

	Jan. 1913.	Feb. 1913.
Water	$ 71.00	$ 53.90
Fuel and electric power @ 1½c. per kw-hr.	340.00	329.90
Labor	450.00	383.50
Lubricating oil	17.50	17.50
Total	$ 863.50	$ 784.80

Average per month, $824.15.

Average saving per month on eight wells, electricity over steam, $495.01. Average saving per well per year $742.56.

Pumping 12 Wells, Average Depth 1100 Feet; 15.5° Baumé

Per well per day:	Steam.	Electricity.
Labor pumping	$1.15	$1.18
Electric power @ 1½c. kw-hr.	...	1.07
Fuel oil	1.47	0.42
Water	1.95	0.95
Repairs to boilers and engines.	0.25	0.06
Repairs to motors, transformers, and power-lines	none to date	
Oil, waste, and packing	0.27	0.17
Totals	$5.09	$3.85

Saving by electricity over steam, $1.24 per well per day = $452.60 per well per year.

Pumping 107 Wells, Average Depth 800 Feet; 13.5° Baumé

	Steam.	Electricity.
Maintenance pipe-lines, wells, pumps, rigs, boilers, motors, transformers, transmission-lines	$0.95	*$0.70
Labor: pumpers, boiler men, electricians, well gang	0.65	0.45
Fuel oil @ 35c. bbl	1.17	0.12
Water waste, lubricating oil	0.52	0.13
Electric power @ 1c. kw-hr.	...	0.57
Totals	$3.29	$1.97

*Electric system, no repairs because new, so added estimated average repairs.

Saving by electricity over steam, per well per day, $1.32 = per well per year, $481.80.

Electric-power cost of pumping 62 wells of an average depth of 1600 ft. and an average production of 103 bbl., averaged, per well per day, @ 1c. per kw-hr., 69 cents.

Electric-power costs for pumping approximately 110 wells, 750 to 2700 ft. in depth, @ 1c. per kw-hr., 84c. per well per day.

In the first three cases cited above it will be noted that although electric power has been installed, there is still a charge made for water and fuel. This is required for washing and heating the oil and, in some cases, shipping it. Water is also required for domestic purposes. In some few instances, steam on the lease has been entirely dispensed with, and no water, except for domestic purposes, is used. In such cases the oil is high gravity and does not require washing, and electric power is used for shipping.

Mention was made of the increase in production, not only because of the fuel oil saved, but because of the more steady and constant pumping motion secured with electric power as compared to steam or gas-engine power. One instance which comes to mind is that of the Mercantile Crude Oil Co. at Coalinga. This company is pumping two wells with the two-variable speed type of electric motor. These wells produce a low-gravity oil with a

Generated on 2024-09-30 00:18 GMT / https://hdl.handle.net/2027/uiug.30112007837898
Public Domain, Google-digitized / http://www.hathitrust.org/access_use#pd-google
Digitized by Google
Original from UNIVERSITY OF ILLINOIS AT URBANA-CHAMPAIGN

large base sediment and sand content. With steam operation it was difficult to maintain a constant pumping stroke, especially in cold and wet weather, and a monthly production of 3300 bbl. was excellent. With electric motors, however, a monthly production of 5000 to 5200 bbl. is secured just as regularly as clockwork. This increase in monthly production is obtained at a reduction in operating expense of the two wells of $4.45 per day.

Three years' experience with electric motors in the California oilfields has removed any doubt which may have existed in the mind of the operator as to their adaptability and reliability. There have been some changes and improvements in design of the oil-well motor since the first one installed, as should reasonably be expected. To meet the special California field conditions, a special oil-well motor has been produced. This motor is of the two-variable speed, double horse-power rated, reversible type. It has a low horse-power, variable low speed for pumping duty, and a high horse-power, variable high speed for cleaning, 'shaking-up' and redrilling, the horse-power rating of the motor depending upon the depth of well to be pumped. The high speed is a little more than double the low speed, and with this type of motor all necessary operations about the well can be performed even more readily than with the steam or gas engine. Not only does the motor effect considerable saving in pumping costs, but also of labor and time in pulling. Although the motor cannot be 'raced' as can the engine, the motor never stops on centre, can handle greater overloads, and pulls the first stand of tubing at the same speed as the last, and thus the total time on the job is even less than when an engine is used.

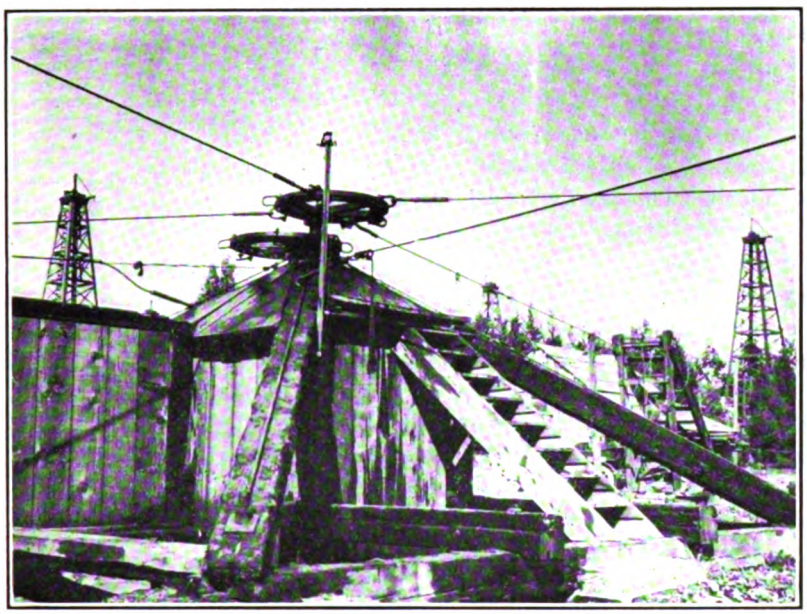

PUMPING JACK OPERATED BY ELECTRIC MOTOR.

So far the discussion has been particularly concerned with wells on the 'beam.' The electric motor effects a similar saving and produces equally excellent results when applied to

Generated on 2024-09-30 00:20 GMT / https://hdl.handle.net/2027/uiug.30112007837898
Public Domain, Google-digitized / http://www.hathitrust.org/access_use#pd-google
Digitized by Google
Original from UNIVERSITY OF ILLINOIS AT URBANA-CHAMPAIGN

'power' or 'jack' drive, as for wells on the 'beam.' It is equally important that the power be operated at a constant speed to maintain production, and any shut-down because of boiler flues blowing out, renewal of gaskets, reboring of cylinders, and ignition troubles affects directly the producer's income. Because of the fewer possible chances of shut-down, the electric motor has replaced many steam and gas-engine-driven powers, the question of continuity of operation often influencing the change rather than the saving in operating cost.

From the cost of operating some 220 wells with electric 'jack' power, the cost per well for electric energy is found to vary from $6 to $14.40 per well per month. The average cost for a 'jack' operating fifteen to twenty-five wells is about $7.50 per well per month. The larger the number of wells driven from one power and the more perfectly balanced they are, the lower the operating cost per well. The depth of well and size of pump affects the power bill directly, though the greatest factor influencing the power bill is the balancing of the wells about the power eccentrics. The nicety to which this can be done with an indicating ammeter inserted in the motor circuit is surprising. With the engine, the balancing is purely a matter of cut, try, and guess.

As an example of the saving effected, below is the cost of operating 58 wells by steam on the 'beam' and the same wells on three motor-driven 'jacks.'

	Per month.
Labor (6 boiler men)	$600
Fuel oil at 35c. per barrel	1827
Lubricating oil, packing, waste, etc.	234
Saving in pipe-line and boiler maintenance	386
Total	$3047
Cost of electric energy, at 1c. per kw-hr.	456
Saving effected	$2591

Water was pumped on property and cost of pumping was not kept separate.

To date there are 750 oil wells in the California fields operated by electricity. Of these, 530 are on the 'beam' driven by individual motors, and 220 by 'jack' power. Considering that the electric motor in California oilfields is barely three years old, it is beyond question that electric power has come to stay.

Santa Ana Reinforced Concrete Arch Bridge

By W. M. THOMAS*

THE reinforced concrete three-hinged arch bridge over the Santa Ana river, near Santa Ana, Orange county, California, has been completed. The river is a typical southwestern stream and subject to big floods during the rainy season. It frequently leaves its defined channel and runs at random on either side for perhaps a distance of three-fourths mile, causing considerable damage to crops near by. Due to this annual occurrence, the county has spent about $150,000 for dredging the river chan-

*Consulting Engineer, Hibernian Bldg., Los Angeles.

Generated on 2024-09-30 00:17 GMT / https://hdl.handle.net/2027/uiug.30112007837898
Public Domain, Google-digitized / http://www.hathitrust.org/access_use#pd-google
Digitized by Google
Original from UNIVERSITY OF ILLINOIS AT URBANA-CHAMPAIGN

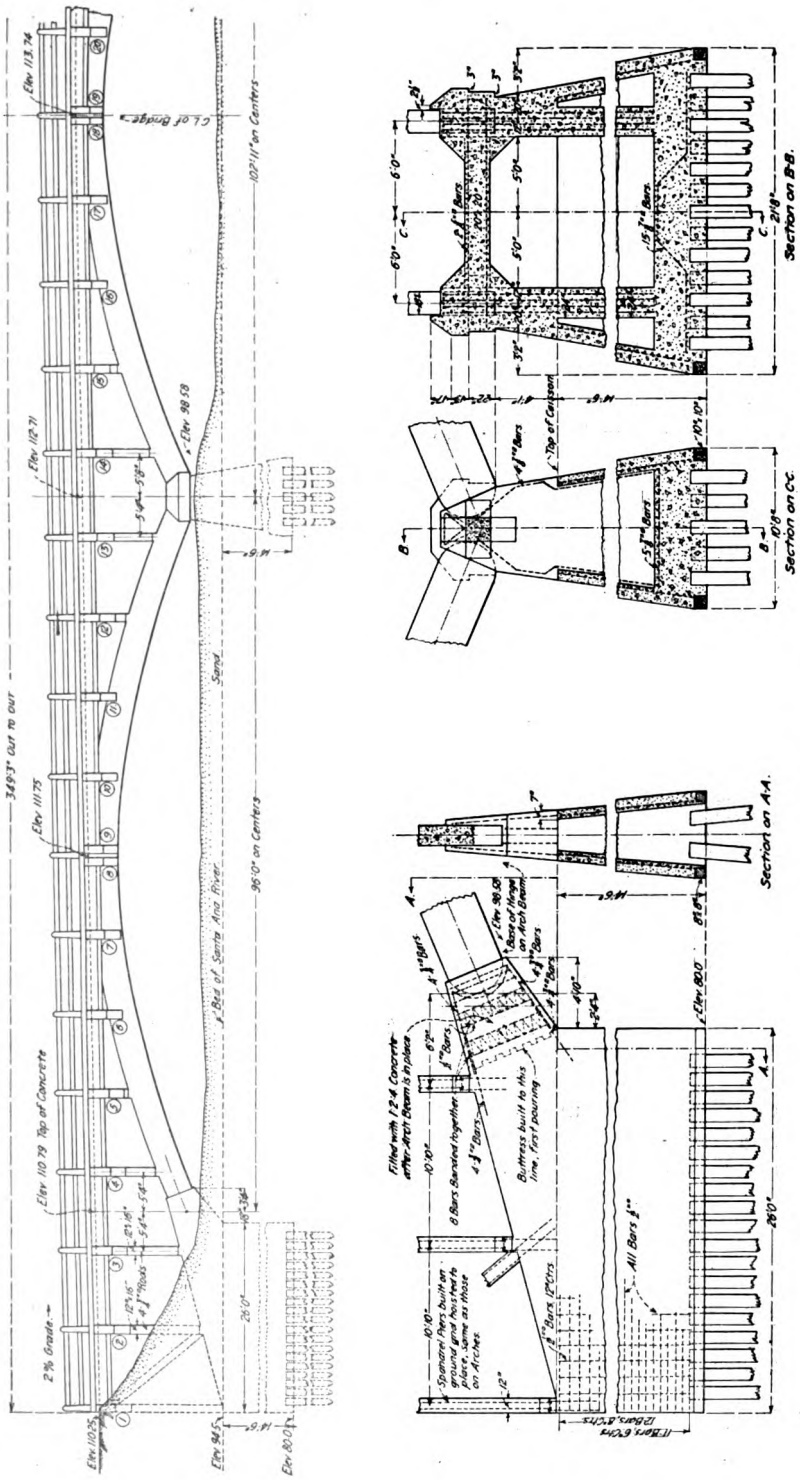

SIDE ELEVATION AND STRUCTURAL DETAILS, SANTA ANA BRIDGE.

Generated on 2024-09-30 00:18 GMT / https://hdl.handle.net/2027/uiug.30112007837898
Public Domain, Google-digitized / http://www.hathitrust.org/access_use#pd-google
Digitized by Google
Original from UNIVERSITY OF ILLINOIS AT URBANA-CHAMPAIGN

nel and has built levees on either side for a distance of about five miles.

These levees, being no more than sand banks, had to be treated carefully, and the first idea was to build a reinforced concrete girder bridge at the point where the new highway crosses the river. On account of the limited height, the road could be carried above the river, thus securing a minimum grade and fill at the approach, together with a clear waterway which is essential.

In the preliminary design for a girder bridge it was found that by the use of short spans giving shallow beams, a large part of the main waterway would be occupied by piers, and again, the use of large spans and the necessary deep girders extending down toward the river, made conditions still worse. An arch bridge was next considered. The county supervisors decided that there should be 100 ft. or more of clear width at the main channel of the river unobstructed by piers, to prevent any danger of the water backing and overflowing the levees. A bridge designed by Thomas & Post according to the Thomas system and submitted by the Young Construction Co. met all the required conditions, and was approved and accepted by the supervisors.

This design included a bridge 350 ft. long with three arches, one at the centre of 103-ft. span and the other two 96-ft. spans. On account of the danger of scour, the piers and abutments were built on piles with bases sunk to a depth of 14 ft. 6 in. below the river bed. Concrete caissons of the required dimensions were built on the surface, over their final position, and easily sunk by the use of a clam-shell bucket which removed the earth from within, thus permitting the caisson to sink by its own weight. After the caisson reached its required depth, the piles were driven within and capped with the regular concrete mat upon which the piers were built, and connected with a diaphragm wall. The abutments were connected in a like manner. As the bridge is the usual Thomas three-hinged arch type, the piers and abut-

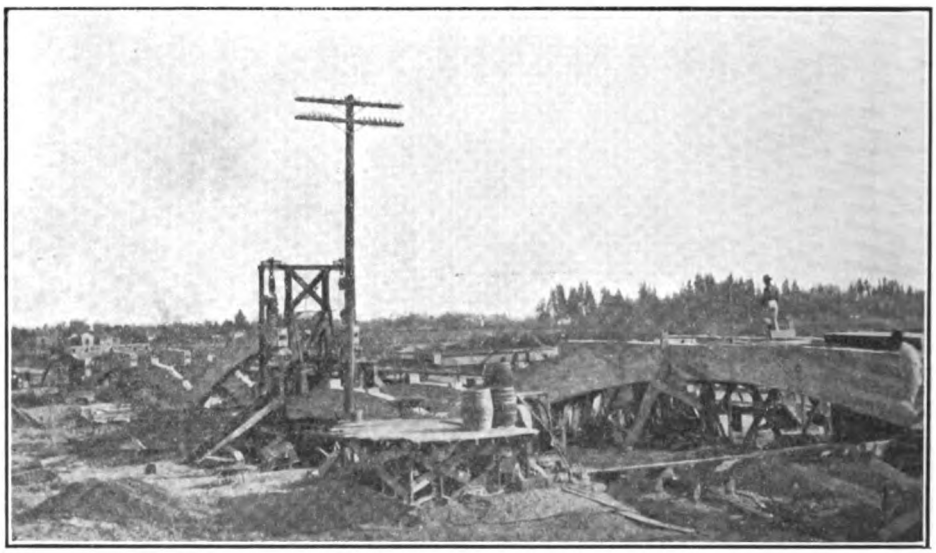

SANTA ANA BRIDGE, SHOWING ARCHES IN PLACE.

Generated on 2024-09-30 00:18 GMT / https://hdl.handle.net/2027/uiug.30112007837898
Public Domain, Google-digitized / http://www.hathitrust.org/access_use#pd-google
Digitized by Google
Original from UNIVERSITY OF ILLINOIS AT URBANA-CHAMPAIGN

ments were stopped at the elevation of the base of the hinges, and work was begun on the arch ribs. As this work was being done late in the season, it was necessary that falsework be eliminated as much as possible on account of the danger of floods occurring at any time. The engineer in charge had pairs of temporary piles driven about 10 ft. apart and capped at a safe height. On these were placed the necessary stringers, each span having two arch-ribs. The forms for these were placed upon the stringers beside one another in what appeared to be about their natural position and supported by 2 by 4-in. struts of required lengths placed between the soffit form and the top of stringers. After the concrete had been poured and set, forms were removed, and the arch ribs were swung into their final position, but in the meantime were supported at the crown on a light tower, thus permitting the completion of the hinges at both crown piers and abutments.

Next in sequence were the spandrel posts. In these are combined the posts and transverse girders, together with a diaphragm brace all poured as one piece. The spandrel posts were all poured on the ground at the end of the bridge, as is typical of this system of construction, and hoisted to their respective positions, then attached by means of a patented connection. The crown girders were poured in place, thus completing the spandrel posts and girders. Then came the longitudinal beams and floor slab. This work was greatly simplified by leaving construction holes in the girders permitting the bolting of pieces thereto to carry the floor and beam forms. By this supporting method, the carpenters cut and nailed all the forms at their benches. These forms were placed by laborers and finally put in alignment and made fast by the carpenters. The floors and beams were then poured in one operation; that is, the part between expansion joints. Of course, these expansion joints were introduced only at the crown and over the piers and abutments.

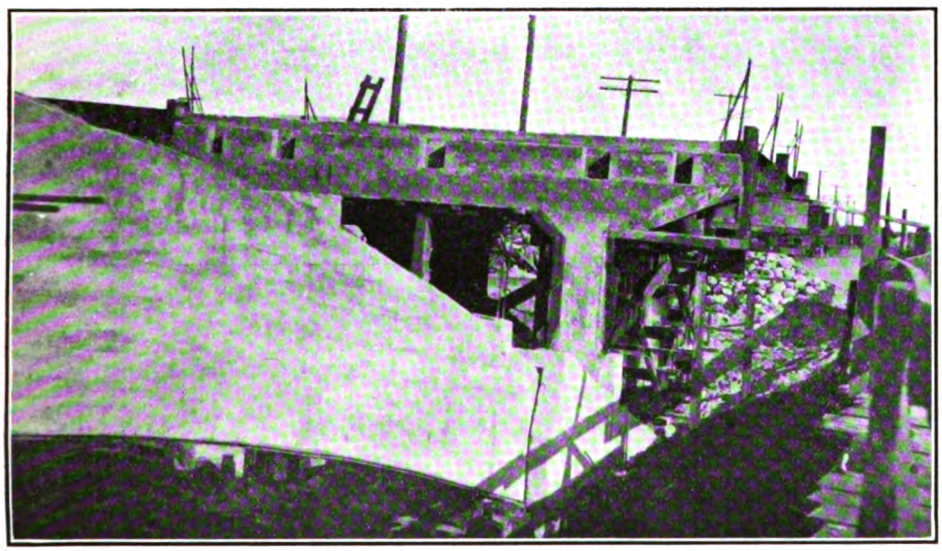

VIEW SHOWING APPROACH AND ABUTMENT FOR SANTA ANA BRIDGE.

The bridge then was ready for the

Generated on 2024-09-30 00:20 GMT / https://hdl.handle.net/2027/uiug.30112007837898
Public Domain, Google-digitized / http://www.hathitrust.org/access_use#pd-google
Digitized by Google
Original from UNIVERSITY OF ILLINOIS AT URBANA-CHAMPAIGN

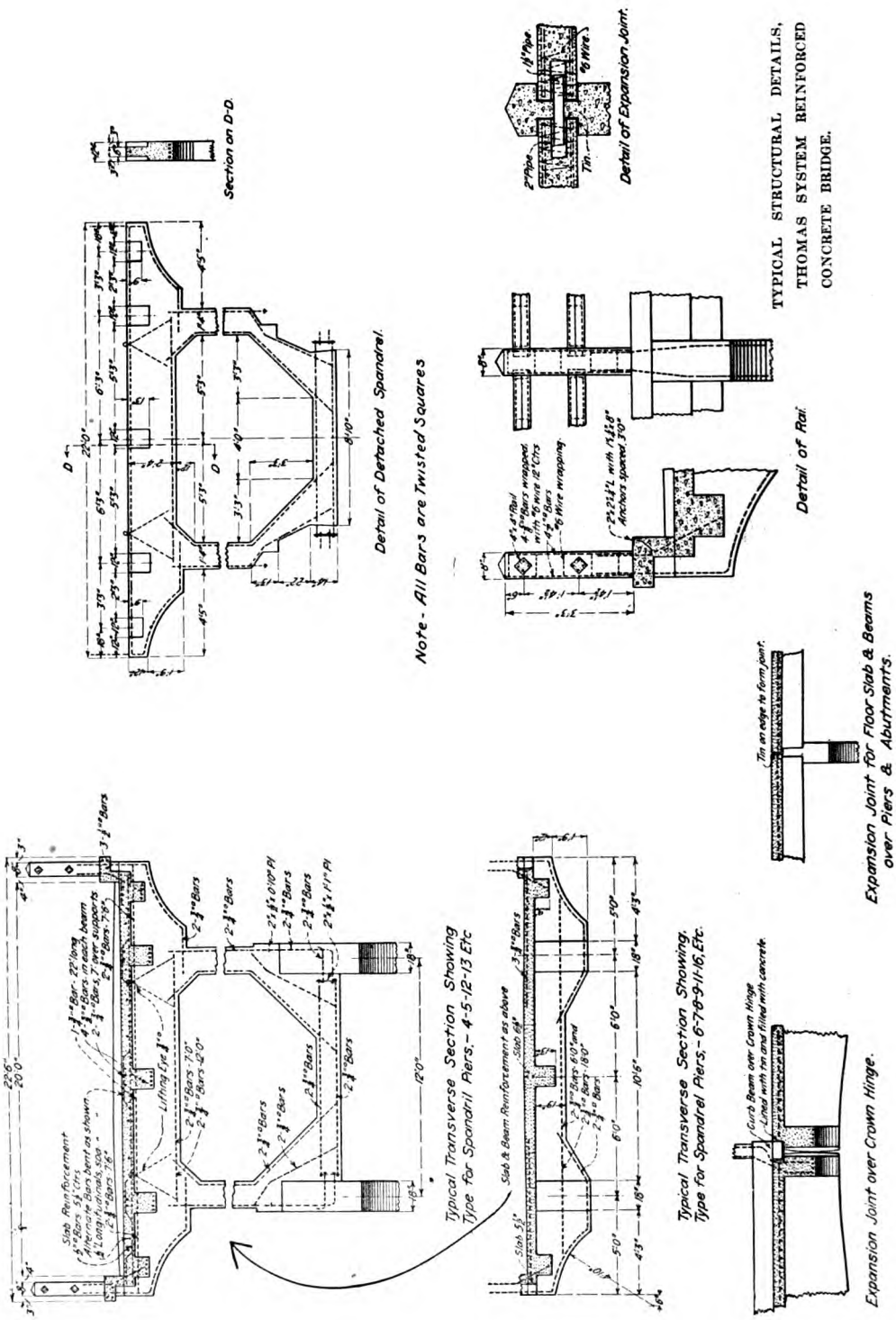

TYPICAL STRUCTURAL DETAILS, THOMAS SYSTEM REINFORCED CONCRETE BRIDGE.

Generated on 2024-09-30 00:19 GMT / https://hdl.handle.net/2027/uiug.30112007837898
Public Domain, Google-digitized / http://www.hathitrust.org/access_use#pd-google
Digitized by Google
Original from UNIVERSITY OF ILLINOIS AT URBANA-CHAMPAIGN

curb and parapet. The curb is simply a concrete angle, projecting well over the curb-beam, giving a very fine crown

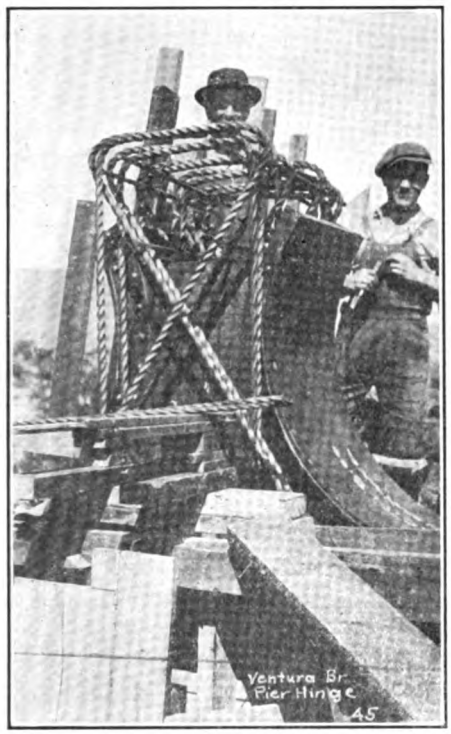

PIER HINGE AND REINFORCEMENT.

or cornice effect when viewed from the side elevation. As the bridge is away from city traffic, the parapet was designed for utility only, and consisted of two rectangular beams, 6 in. deep, placed parallel horizontally. These were poured on the ground, then placed in position with ends projecting into the forms for the posts and shrunk into the post concrete. The posts are plain square, with one over each spandrel post, thus completing the structure.

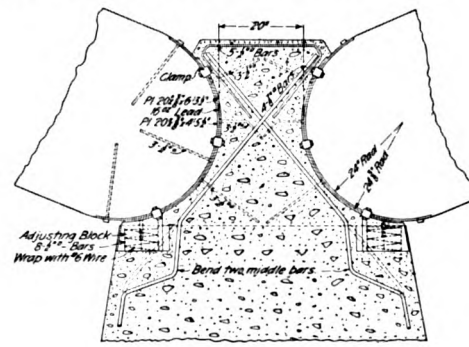

Detail of Pier Hinge

It is stated that the common lumber, as purchased in quantities, cost $22.50 per thousand feet delivered. There was no water in the stream until piers were completed. The water for the mixer was obtained by excavating and boxing out the sand to 3 ft. below the dry bed of the river, when water was reached and pumped by a 1½-in. centrifugal pump belted to a 2½-hp. Fair-

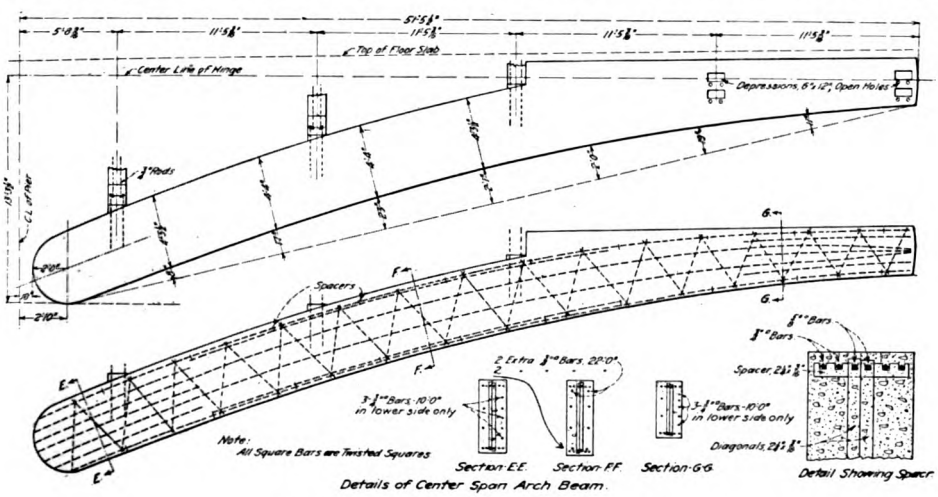

DETAILS OF CENTRE SPAN ARCH BEAM.

Generated on 2024-09-30 00:18 GMT / https://hdl.handle.net/2027/uiug.30112007837898
Public Domain, Google-digitized / http://www.hathitrust.org/access_use#pd-google
Digitized by Google
Original from
UNIVERSITY OF ILLINOIS AT
URBANA-CHAMPAIGN

banks-Morse gas-engine. Water was piped to the top of an old wagon bridge, thence through two 1-in. mains each way with hose connection at every span. The main waterway of this 'dry' river corresponds to the central span. This work was done on a cost-plus-percentage basis at a total cost of $24,000 exclusive of the timber salvaged by the county, the value of which was not available. The cost was somewhat high because the work was impeded by the temporary bridge close to one side of the concrete bridge. J. L. McBride was the county engineer. The work was performed by the Young Construction Co. of Los Angeles under the superintendence of V. W. Willits. T. M. Talbot is chairman of the board of supervisors. The county engineer was merely required to furnish in a rough way the plans and requirements for the bridge, from which competitive plans were drawn and submitted, with the result that the Thomas system was selected by the Young Construction Co. as being best adapted to meet the conditions.

New Oil Engine Installation

THE Diesel locomotive built by Sulzer Bros. of Winterthur, in conjunction with Borsig & Tegel, has now completed its first long journey. The locomotive traveled from Switzerland to Berlin under its own power, and no trouble whatever was experienced during the long run from Winterthur. The locomotive, which has been built to the design of A. Klose, chief engineer, was driven by engineers and officials of the Prussian railway department and is shortly to undergo extensive trials on the Berlin Magdeburg line. For reasons which will be readily understood, little has been made known as to the constructional details of the locomotive. The following particulars, however, have been obtained. The locomotive is provided with two separate engines, the main driving engine and an independent auxiliary Diesel engine for driving the air-compressor. Ordinarily the main engine works as a normal Diesel engine, but for starting purposes and when changing trains, compressed air is used in the main engine, which then works as a compressed-air engine. The changing over from compressed air to fuel is not effected until a sufficiently high speed has been reached. When the engine is run on fuel the power can be considerably increased by supplying at the same time compressed air to the working cylinders. The locomotive, which weighs 85 tons in working order, has developed 1000-1200 hp., and is expected to attain a speed of over 60 miles an hour. There is a driver's platform at each end of the locomotive, which dispenses with the turntable.

Generated on 2024-09-30 00:21 GMT / https://hdl.handle.net/2027/uiug.30112007837898
Public Domain, Google-digitized / http://www.hathitrust.org/access_use#pd-google
Digitized by Google
Original from UNIVERSITY OF ILLINOIS AT URBANA-CHAMPAIGN

The Engineering Digest

Twin Peaks Tunnel, San Francisco*

THE Board of Public Works has completed the work of preparing its report covering the construction of the Twin Peaks tunnel and the same was filed with the Board of Supervisors last Monday.

The report is a voluminous one and comprises 71 pages of maps, showing the separate subdivisions of real estate upon which the assessment will be levied; 127 pages of typewritten report covering the specifications under which the work will be done, accompanied by 47 sheets of drawings showing the details of the construction; a list of lots that will be benefited by the work, the names of the owners, and the estimated benefits that each lot will receive. These aggregate 16,189 in number. There is a description of property that will have to be acquired and an estimate of the cost of the entire project. A force in the city engineer's office has been at work on this report for the past year, and a prodigious amount of work is represented in the completed report.

The general description of the project calls for a tunnel through Twin Peaks ridge, the northeasterly portal of which is to be situated near the easterly line of Collingwood street 64 ft. southerly from Seventeenth street. The southwesterly portal is to be situated in the Rancho San Miguel at a point near the intersection of the projected centre lines of Twelfth avenue and Taraval street. Two additional entrances to the tunnel are to be located where the tunnel will run under Eureka street and where it will run under the southerly boundary line of the Relief Home tract.

Generally the main bore of the tunnel shall be constructed to be approximately 24 ft. wide in the clear and to be properly bored and properly and suitably lined with masonry where necessary, said masonry to be reinforced where necessary, and with suitable and convenient excavations for and construction of stations at said tunnel entrances above mentioned, properly lined and faced with suitable material, with convenient and suitable platforms and passageways and conveniences; the sides of said approaches by means of open cuts to be supported with proper and suitable retaining walls or bulkheads with coping and balustrades or railings constructed of masonry to be reinforced where necessary, and the portals or entrances to be constructed of masonry; said tunnel to be furnished with shafts for ventilation at necessary points and with suitable provision for drainage and to be provided with all appurtenances necessary to make said tunnel fit and convenient for public use.

Two districts have been selected as being benefited by the proposed improvement and are to be assessed to pay the cost thereof. The southwesterly district embraces all of the lands lying from the Relief Home tract to the ocean. It includes the Parkside tract south of Ortega street and west of Sixteenth avenue, south of Rivera street, the San Miguel rancho, the Ingleside tract, a part of Ocean View north of Farallone avenue, a part of the tract of the City Land Association, and the Lake Merced lands of the Spring Valley Water Company.

The northeasterly district is embraced within the following boundaries: Commencing at Market and Powell streets to Post street, thence to Van Ness avenue, thence to Fell street, thence to Gough street, thence to Oak street, thence to Steiner street, thence to Duboce avenue, thence to Noe street, thence to Fifteenth street, thence to Castro

*Abstract from *Municipal Record*, July 31, 1913.

Generated on 2024-09-30 00:24 GMT / https://hdl.handle.net/2027/uiug.30112007837898
Public Domain, Google-digitized / http://www.hathitrust.org/access_use#pd-google
Digitized by Google
Original from
UNIVERSITY OF ILLINOIS AT
URBANA-CHAMPAIGN

street, thence to Seventeenth street, thence to Douglass street, thence to Nineteenth street, thence to Guerrero street, thence to Seventeenth street, thence to Folsom street, thence to Fifth street, thence to Market street.

The report contains a statement of the estimated cost of the improvement as follows:

Cost of construction	$3,347,823.23
Incidental expenses	125,000.00
Lands taken in fee	511,098.00
Easements acquired	6,528.00
Leaseholds taken	3,840.00
Total	$3,994,289.23

Approximately 85% of the cost is to be assessed upon the land in the southeasterly district and the remaining 15% upon the land in the northeasterly district.

An area comprising nearly one-sixths of the total area of the city, now practically inaccessible, will be brought into quick and easy communication with the business centre by means of the tunnel. The assessment is considered extremely low upon individual lots, being much lower than that for the Stockton street tunnel and averaging less than 2c. per square foot.

The estimated time given the contractor to complete the work is 600 calendar days, and a bonus will be given or a penalty exacted of $750 per day as an inducement to the contractor to expedite the work. This method has been very successful in the Geary street railway work and in the Stockton street tunnel for inducing prompt action on the part of contractors.

The general grade of the tunnel is easy, nowhere exceeding 3%, so that high speeds for electric cars can be made through it.

It is estimated that the time in passing through, including the stop at a subway station at Laguna Honda, should be less than 10 minutes, so that the 15,000 acres of land at the southwesterly extremity of the tunnel will be brought nearer to the business centre of San Francisco than either Oakland, Berkeley, or Alameda.

Exhaustive borings have been made all along the route, 500 ft. apart, to determine the exact nature of the material that will be encountered in making the bore, so that the contractors will not have to bid blindly on the cost of the work. All tubing and pipes for electric wires are carried in the concrete sidewalks and niches for operating these are spaced every 400 ft. apart.

Similar refuge niches are placed on each side, 50 ft. apart for the safety of laborers who may be working in the tunnel. An elaborate system of ventilating is to be provided by means of separate compartment on top of the tunnel about 5 ft. high, through which all the foul air will be extracted by means of fans. This is superior to the single opening where cars running at high speed in opposite directions mingle the foul with the pure air.

The Engineers' Club of Seattle

By J. THOMAS DOVEY

THE etymologists tell us that there appeared, somewhere about the middle of the seventeenth century, among other wonderful philological recrudescences, the term 'clubbe'; which was applied to "convivial societies originating and meeting in coffee houses and taverns." With the advance of civilization and extension of knowledge, our etymologists have not only graciously embraced the phonetic spelling, but likewise have softened their original anathemas so that our present organization may properly come under their later term as "A company of persons organized to meet for social intercourse or for the promotion of some common object. such as literature, and science.

And while we sincerely thank our erudite brethren for our admission into respectability we are inclined to still cling to some of the earlier and less polished attributes, without hesitation, and still desired to be classed as 'convivial' and will indeed go further and add fraternal. For the scope of the Engineers Club of Seattle is circumscribed only by the limitations of its members, and as they are men in the front rank of and interested in all branches of the engineering profession and as the club constitution does not limit their ability, we are confident that they cannot only bear the

Generated on 2024-09-30 00:20 GMT / https://hdl.handle.net/2027/uiug.30112007837898
Public Domain, Google-digitized / http://www.hathitrust.org/access_use#pd-google
Digitized by Google
Original from UNIVERSITY OF ILLINOIS AT URBANA-CHAMPAIGN

lighter attributes, but in so doing cement the feelings of fellowship and democracy.

For the Engineers' Club is indeed a club, in the social sense, and organized upon the lines of our distinguished predecessors in New York City; where the purpose is not only to bring the various branches of the profession into close touch, but to accomplish this by the method of personal and 'convivial' intercourse. The organization wishes also to be instrumental in bringing the engineer closer to his client, the brother engineers closer to each other in the professional work, and the standards of all work to a higher plane both for employer and employee.

For it has been remarked most succinctly that "In nearly all fields of modern industry and throughout the whole range of rapidly increasing activities the engineer is indispensable where the aim is to secure maximum return for mimimum expenditure, the nicest adaptation of means to ends," and this means the closest kind of association and absolute trust, which can only come from some acquaintance and familiarity with moral as well as professional standards. The present membership is 125 and luncheon meetings are held weekly at the College club, where we most cordially invite visiting engineers to be our guests and meet the members of the organization. With the firm belief in our mission and the sustained enthusiasm of our members, we are putting forth our energies for better understanding, better work, and stronger fellowship.

The American Petroleum Society

THE American Petroleum Society was organized September 10 at the Experiment Station of the U. S. Bureau of Mines, Pittsburgh, Pennsylvania. This organization is the result of an effort of the Bureau for the past seven years to bring together the men interested in the petroleum industry. Invitations were sent out in July to the secretaries of twenty-four of the great national societies of the United States, inviting them to be present and coöperate in this organization. Eighteen of these societies responded at a meeting on August 1 at the Bureau of Mines. A similar invitation was sent out in August to eight additional societies, making a total of thirty-two societies that were invited to attend the September conference. A large number of these were represented at the meeting on September 10, when the final organization was completted.

This society will concern itself with the study of all phases of natural gases and petroleum, including the origin, statistics, conservation, drilling methods, production, transportation, storage, refining, and specification for refined products.

When it is considered that each year, within the United States alone, there is produced crude petroleum and natural gases having a value in excess of $200,000,000, it is reasonable to suppose that the future of this society is assured. There is today a tremendous waste of natural gases, which, by proper methods of drilling, could be prevented. Also there is a great waste of crude oil itself by improper methods of production, whereby in the fields producing paraffin oils the paraffin is allowed to congeal around the well, thereby sealing in the oil strata and thus preventing the recovery of the oil. The necessity for a critical study of petroleum and gas production and conservation is evident.

At the meeting on September 10 at the Bureau of Mines, the constitution and by-laws were adopted, and officers were elected as follows: President, C. D. Chamberlin, of the National Petroleum Association, Cleveland, Ohio; vice-president, R. Galbreath, of the Independent Oil & Gas Producers' Association of Oklahoma, Tulsa, Oklahoma; secretary, Irving C. Allen, U. S. Bureau of Mines, Pittsburgh, Pennsylvania; treasurer, Warren C. Platt, of the Independent Petroleum Marketers' Association, Cleveland, Ohio; acting past president, Frank B. Fretter, of the Western Petroleum Refiners' Association, Coffeyville, Kansas. In addition to the foregoing, these members were elected to serve on the executive committee:

Ralph Arnold, Los Angeles, Cal.; C. F. Clarkson, Society of Automobile Engineers, New York City; G. M. Swindell, Chamber of

Generated on 2024-09-30 00:17 GMT / https://hdl.handle.net/2027/uiug.30112007837898
Public Domain, Google-digitized / http://www.hathitrust.org/access_use#pd-google
Digitized by Google
Original from UNIVERSITY OF ILLINOIS AT URBANA-CHAMPAIGN

Mines and Oil, Los Angeles, Cal.; Edmund O'Neill, University of California, Berkeley, Cal.; E. B. Rich, Gasoline Producers' Association, Parkersburg, W. Va.; George H. Taber, Gulf Refining Co., Pittsburgh, Pennsylvania.

It is anticipated that the first annual meeting will be held at some convenient place in the United States in the spring of 1914, and the second annual meeting will be held at the Panama-Pacific International Exposition in San Francisco in 1915. At the 1915 meeting it is anticipated that all of the petroleum societies in the country will meet in one great congress where many things of interest and of value will be presented and discussed by those present.

An official invitation has been sent from the president of the Exposition at San Francisco to the president of the International Petroleum Commission, which meets in January 1914, in Bucharest, Rumania, to hold its annual meeting for 1915 in San Francisco. This meeting will be part of the great meeting of the petroleum industries of America, where the foremost petroleum technologists and scientists of the world will congregate. Plans are already being formulated for this great 1915 meeting. Very shortly the Bureau of Mines will issue a report on the formation of the American Petroleum Society.

The Pacific Light and Power System*

By B. P. ROWE

THE Pacific Light & Power Corporation is now constructing a transmission system with generating stations and substations which will operate at a line pressure of 150,000 volts. This is the highest voltage which has yet been utilized for commercial transmission. The power will be generated at two hydro-electric generating stations, situated on Big creek, about 70 miles from Fresno, California. These stations are practically duplicates and are about four miles apart. Each station is designed for an ultimate capacity of 105,000 kva., generated at 6600 volts, 3 phase, 50 cycles, and will contain six 17,500-kva. water-wheel driven revolving field alternators, two being installed with the initial equipment, together with two 250-volt exciters. Those for power-house No. 1 are rated at 150 kw., and for power-house No. 2 at 200 kw. One exciter in each station will be motor driven and one water-wheel driven.

The current, generated at 6600 volts, will be stepped up to 150,000 volts through banks of 5833-kva. transformers connected in sets of three, with the low tension windings delta and the high tension star connected. Each station will have an initial installation of two banks of these transformers and ultimately six banks.

Power will be transmitted from these stations by duplicate sets of 3-phase transmission lines a distance of 275 miles to the Big Creek sub-station at Los Angeles, the generating stations being connected so that they may be operated singly or in parallel on

FIG. 1. OUTLINE SKETCH SHOWING LOCATION OF TRANSMISSION LINES.

either one or both transmission lines. Each line is designed to transmit approximately 60,000 kva.

At Borel Junction, about 135 miles from

*Abstract from *The Electric Journal*, August 1913.

Generated on 2024-09-30 00:18 GMT / https://hdl.handle.net/2027/uiug.30112007837898
Public Domain, Google-digitized / http://www.hathitrust.org/access_use#pd-google
Digitized by Google
Original from UNIVERSITY OF ILLINOIS AT URBANA-CHAMPAIGN

Los Angeles, a switching station will be established, and additional power, approximately 13,500 kva. at 60,000 volts, will be supplied from the Kern River system through step-up transformers. Most of this power will be generated from five 2000-kw. 2-phase water-wheel driven generators situated at Borel, and the balance from the Kern River system.

At the Big Creek sub-station there will be banks of step-down transformers which will reduce the voltage from 150,000 to 6600 or 15,000 volts, as required. At this station two 15,000 kva. synchronous condensers will be connected to the system through a set of 6600-volt bus-bars. These machines can be operated either as motors or generators, and may be used initially to assist in maintaining a better power factor on the system. Later, the machines may be used as generators in one of the power-houses.

Additional power will also be supplied to the Los Angeles system over 60,000-volt lines from the Kern River system. Power amounting approximating to 15,000 kva. will also be supplied by local generating stations through step-up transformers.

The principal load at Los Angeles will be the power supplied to the Pacific Electric and the Los Angeles railway systems. The railways operate from 15,000-volt transmission lines, and the power is nearly all converted into direct current through motor-generator sets of large size.

A general idea of the transmission system may be obtained from Fig. 1. The transmission lines from power-houses No. 1 and 2 may be operated either with or without the neutral grounded and, although it is expected that the neutral points of the transformer banks at the power-houses will be grounded, provision is made to operate ungrounded if desired, and all high-tension apparatus is insulated with this possibility in view.

The step-up transformers at Borel Junction will be connected with the neutral of the low-tension side grounded, thus grounding the 60,000-volt system. The step-down transformers at Kern sub-station will also have the neutral of the 60,000-volt system grounded, and the 15,000-volt generating system will be grounded. No reactance or resistance is inserted in these grounds. Whenever the turbines and engine-driven generators on the Kern River system are operated in parallel, the ground is disconnected from the neutral of the engine-driven machines. The neutral is not grounded at any of the other sub-stations, and the 15,000-volt distribution system in Los Angeles is operated

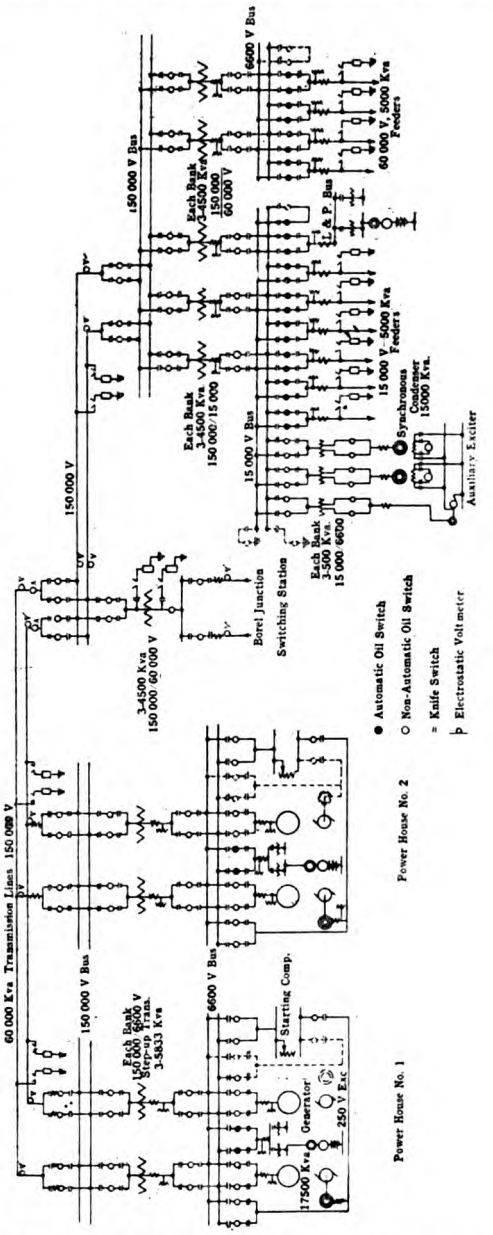

FIG. 2. SINGLE LINE DIAGRAM OF CONNECTIONS OF DIFFERENT STATIONS.

without the neutral grounded. It is expected that the power factor of the load will be approximately 85% for initial conditions when operated without synchronous condensers.

Generated on 2024-09-30 00:23 GMT / https://hdl.handle.net/2027/uiug.30112007837898
Public Domain, Google-digitized / http://www.hathitrust.org/access_use#pd-google
Digitized by Google
Original from UNIVERSITY OF ILLINOIS AT URBANA-CHAMPAIGN

The Pacific Light & Power Corporation, through its engineers, the Stone & Webster Engineering Corporation of Boston, contracted for all the apparatus for the initial installation, and much of the material is now on the ground. The high-tension apparatus involves disconnecting switches, oil switches, and lightning arresters for 150,000-volt service, together with the transformers to raise or lower the voltage from 150,000 volts to the working voltage. All 150,000-volt high-tension apparatus is tested at the factory at 375,000 volts for one minute and at 300,000 volts, after installation, for one minute.

The general scheme of connection for lines, switching apparatus, etc., for the new installation is shown in the single line diagram, Fig. 2. All of the switching devices from generators to lines, as well as the high-tension switching devices in the sub-stations, will be non-automatic. Provision is made, however, for operating the oil switches automatically at a later date, if desired. By means of switching devices provided, it will be possible to operate power-houses No. 1 and No. 2 in parallel with the multiple connection made at only one point, this being the bus junction switch between the two 15,000-volt busses in the Big Creek sub-station. Again, power-houses No. 1 and 2 may be operated separately if desired, each with its own transmission line and 15,000-volt bus in the Big Creek sub-station. Or both may be operated in parallel on the 150,000-volt lines, this method being used to equalize the load between the transmission lines, and will be employed when one line is out of commission. The sub-station at Borel Junction may be connected in to supply power to either or both transmission lines in parallel with the generating stations, or this source of power may be cut off altogether.

If desired, the system may be operated at 135,000 volts, as the apparatus and meters are proportioned to provide for the extra current which would flow at the lower voltage with the rated output in kilovolt-amperes. Voltage regulation will be maintained by Tirrill regulators, a large regulator being installed in each of the two generating stations. Another similar regulater will be installed and operated in connection with the synchronous condenser in the Big Creek sub-station. The 150,000-volt oil switching devices are guaranteed to rupture short-circuits on the system when connected to five generating units in each station of a total capacity of 87,500 kva., the reactance of the generators being approximately 8%. The large oil switches connected to the 6600-volt bus-bars for use with generators and step-up transformers will each have a rupturing capacity of at least 75,000 kva. There will be one pair of automatic circuit-breakers in each power-station, these being used to carry power for station auxiliaries.

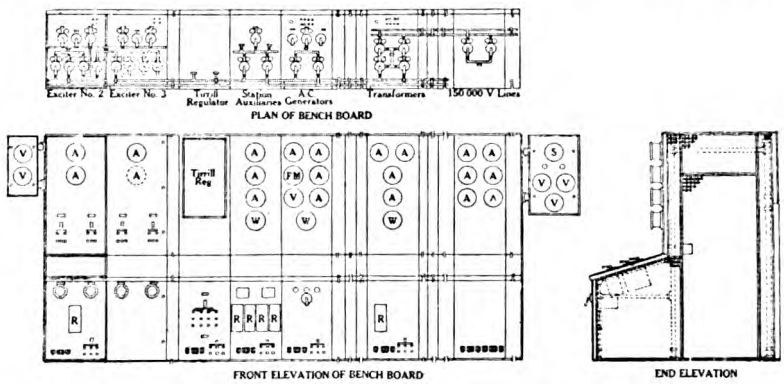

FIG. 3. SWITCHBOARD ARRANGEMENT AT POWER-HOUSES NO. 1 AND 2.

All of the oil switches are either motor or solenoid operated, those in power-house No. 2 being entirely solenoid operated. A complete set of disconnecting switches and double set of bus-bars for selective switching is indicated in Fig. 2. The disconnecting switches will be mounted on the station walls with blades vertical when closed, and will be operated by switch hook poles. All of the 150,000-volt bus-bars and connections will be made of 1¼-in. iron pipe supported from porcelain insulators.

Generated on 2024-09-30 00:19 GMT / https://hdl.handle.net/2027/uiug.30112007837898
Public Domain, Google-digitized / http://www.hathitrust.org/access_use#pd-google
Digitized by Google
Original from UNIVERSITY OF ILLINOIS AT URBANA-CHAMPAIGN

The electrically operated switching devices and accessories in power-houses No. 1 and 2 will be operated from bench boards, the inclined top being utilized for the control switches, indicators, and miniature bus system in the usual manner, while the upright rear portion will contain panels on which will be mounted the meters and indicating instruments. One section in each bench board will contain the Tirrill regulator. The station voltmeters and synchroscopes will be mounted on swinging panels at the ends. The front of the lower portion of each bench board will be utilized for the exciter rheostat hand wheels and sprocket control as well as relays and testing receptacles for the meter circuits. Each bench board will contain fifteen sections, consisting of two exciter sections, two generator sections with two blank sections for future generators, one regulator section, one blank future regulator section, one station auxiliary section, two step-up transformer sections with two blank sections for future transformers, and two outgoing feeder sections each to control one 150,000-volt, 3-phase, outgoing feeder.

The feeder control panels will be standard 90-in. straight switchboard panels, each to contain the solenoid-operated alternating-current generator switches and the exciter main and equalizer solenoid-operated switches —all of these being operated from the bench board. These panels form a separate independent switchboard. The alternating-current generator rheostats are motor operated and controlled from the bench board. The station low-tension lighting and power system as well as the storage batteries and charging system are likewise operated from a panel switchboard.

All of the switchboards as well as the panels in the bench board are of black Monson slate. The apparatus mounted on the panels, except miniature bus-bars and current-carrying parts, are finished in black marine finish. Fig. 3 shows a general view of the bench board. The rear is enclosed with iron grill work, entrance to the interior being obtained by doors in the grill at each end. Watt-hour meters are mounted on panels in the rear.

The switching equipment in the Borel Junction sub-station is similar to that in power-station No. 2 except that all oil switches are hand operated. The switching apparatus in the Big Creek sub-station is similar in character to that in power-house No. 1, and is an extension of an existing system already in operation.

Prevention of Waste of Oil and Gas*

By RALPH ARNOLD and V. R. GARFIAS

WITH the present state of our knowledge regarding the situation of the 'gusher' and 'gasser' strata in the developed fields, there is no excuse for the general lack of precautions taken before the depth is reached at which the flow is expected. Furthermore, if the well is being drilled in a new or prospective field, adequate precautions should be taken so as not to jeopardize in advance the possible profits of such an uncertain and expensive undertaking. The additional cost of the safety devices is insignificant in comparison with the total cost of drilling such wells and with the amount that can usually be saved if their rate of production is regulated. It may be safely stated that practically all of the great waste resulting from the unrestricted flow of gassers and gushers can be prevented easily by known means which generally are within reach.

Controlling the rate of production of the well has a direct bearing on the returns to be derived from the product. There are times when, owing to the market conditions and the transportation and storage facilities, the 'bringing in' of the well might be an unwelcome event, as was strikingly shown in the case of the Lake View gusher. Experience also shows that a gasser or gusher will yield a greater total production if allowed to flow only a fraction of its capacity, the famous Huasteca No. 7 well in the Mexican oilfields affording a most remarkable case in point.

At the time of writing, this gusher has been flowing under perfect control for about 28 months, yielding about 23,000 bar-

*Abstract from Technical Paper 42, U. S. Bureau of Mines.

Generated on 2024-09-30 00:18 GMT / https://hdl.handle.net/2027/uiug.30112007837898
Public Domain, Google-digitized / http://www.hathitrust.org/access_use#pd-google
Digitized by Google
Original from UNIVERSITY OF ILLINOIS AT URBANA-CHAMPAIGN

rels per day under a pressure of about 285 pounds.

One of the most successful apparatus devised with a view to controling whatever flow of oil or gas is encountered is the blow-out preventer, which has given general satisfaction, particularly in drilling with the rotary.

The blow-out preventer (Fig. 1) is a modified type of a stuffing-box casing head, which in turn is an addition to the four-way T. The immediate object of the preventer is to control the flow of oil or gas between two strings of casing, and naturally its use is better adapted to drilling by the rotary method in which the circulating water keeps an open space between the inner casing and the wall of the hole. An idea of its operation may be gained by imagining a four-way T attached to the top of the last casing set or landed and the inner casing passing through the T, the flow of oil or gas between the casings being deflected to the lateral openings of the T by closing the annular space between the inner casing and the upper part of the T by means of a stuffing box. In the preventer the stuffing box can be removed or put in place by turning adjuster screws (*a*, Fig. 1) which operate slips (*b*, Fig. 1) provided with hydraulic packing that fit around the inner casing as an adaptable split valve. To the lower opening are bolted interchangeable screw flanges to fit standard casings from 6 to 12½ in. diam., and to the opposite opening are attached suitable guide plates (*c*, Fig. 1) to prevent the wearing of the inner parts of the apparatus by the revolving inner casing. These guide plates are made to fit casings from 8 to 2¼ in. diam. The lateral openings (*d*, Fig. 1) are threaded to fit pipe 6 in. diam. The apparatus is manufactured of cast steel and lined with babbitt metal, being tested to stand a pressure of about 2000 lb. per square inch. A wrench in two parts (*e*, *f*, Fig. 1), which are welded together to the required length, is provided to turn the adjuster screws (*a*, Fig. 1).

To insure the successful operation of the preventer, careful attention must be given to all the details, such as welding the bars, fitting the small pins that secure the wrench to the screws, and providing a suitable place outside the derrick for the man who is to operate the wrenches, etc., as soon as the apparatus is put in place.

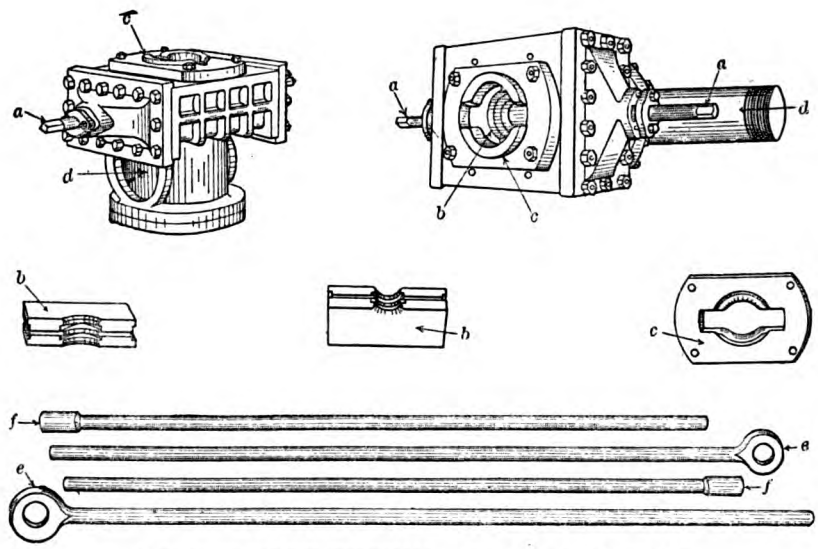

FIG. 1. BLOW-OUT PREVENTER. TWO VIEWS AND PARTS.

The preventer, when used, is always placed on the last string of casing set or landed, thus controlling the flow between that string and the drill pipe or casing that is being lowered. The slips should be in a position to be clamped around the drill pipe, but should not be kept too near it, in order to avoid possible damage to the hydraulic packing. If the well is being drilled with a rotary rig, the back-pressure valve inside the drill pipe will effectively prevent any flow upward through this casing, and if the standard rig is used, a heavy gate valve, which can be

Generated on 2024-09-30 00:18 GMT / https://hdl.handle.net/2027/uiug.30112007837898
Public Domain, Google-digitized / http://www.hathitrust.org/access_use#pd-google
Digitized by Google
Original from UNIVERSITY OF ILLINOIS AT URBANA-CHAMPAIGN

closed after removing the drilling tools, is placed on top of the inner casing. The only outlet left is the space between the casings, and the flow through this opening can generally be controlled by clamping the split valve of the preventer around the drill pipe and closing the gate valves on the pipes connected to the two lateral openings.

It sometimes becomes necessary to exclude from the drill-hole water or gas found in an overlying sand in order to control the well or to recover or test for the oil below. This end can be easily accomplished in drilling with a rotary rig by forcing muddy water to the bottom of the well through one of the lateral openings of the preventer, the pressure being regulated by closing the valve connected to the other opening. A back-pressure valve in the drill pipe will prevent the flow of the mixture through this casing. By drilling a short distance and forcing as much mud as possible into the porous sands penetrated, a plastered wall of clay is built throughout the gas-bearing or water-bearing strata. After the entire thickness has been penetrated and the casing landed in an impervious bed, another string may be used to tap the oil-sands below. The gas thus excluded can be recovered afterward by drilling shallower wells to the upper sands.

This method can also be employed in drilling the entire thickness of a gas or oil-sand under tremendous pressures, an operation that might otherwise prove troublesome. The mud can easily be removed by releasing the pressure or bailing down the water in the hole, a strainer or perforated casing being placed in the sand to prevent the wall of the well from caving when the pressure is released.

It is often advisable before drilling is continued to ascertain whether certain beds carry oil. The work involved is often accompanied by accidents and loss of time, as the material may collapse and pack around the casing, thus preventing its removal or further lowering. Many such accidents can be avoided and the required tests made by using a preventer or a stuffing-box casing head in the following manner.

After the preventer has been attached to the last casing set, a special shoe about 8 ft. long is attached to the bottom of the inner casing, and this is lowered to the bottom of the hole and driven down into the formation, making a water-tight joint. The split valve of the preventer is then closed. A pump is connected to one of the lateral outlets, the valve on the other being kept closed to control the pressure in the well. Muddy water is then pumped in, and the pressure between the casings is increased in order that the formation will not cave in and 'freeze' the inner casing. While the pressure is maintained, the column of fluid in the inner casing is bailed out. This fluid, being a representative sample of that which came from the formations passed through, should show the presence of oil if any has been encountered. Great care should be exercised in bailing, as the casing may happen to be in such condition that it will not withstand the outside water pressure.

Perhaps the greatest individual losses in connection with flowing oil and gas wells have been caused by conflagrations which in most instances could have been avoided by proper precautions. In such conflagrations the gas, owing to its lower flash point, is generally set on fire before the oil. Ignition may be caused by fires under boilers or in forges, by unprotected lamps, burning matches, or spontaneous combustion at the bearings of the calf wheel, bull wheel, 'headache' post, or band wheel in the engine-house. It is also claimed that the friction of pebbles striking each other or rubbing against the casing as they are expelled with great force with the gas or oil may cause sparks that will set on fire the more inflammable hydrocarbons. In certain oilfields fires caused by lighting are comparatively numerous.

The prevention of these fires depends on the proper control of the flow of gas and oil, the ventilation of the space immediately above and near the well so that no gas will accumulate, and the keeping of boiler fires, forges, lamps, burning matches, poorly insulated electric wires, etc., at such a distance or in such a position as to eliminate danger.

The most effective means employed for subduing gas or oil fires has been the use of steam discharged in great quantities and under high pressure against the lowest part of the flame, in a manner to be described in a later publication by the Bureau. Well cappers, such as the Mortenson, have also been successfully used, as described below. Nature at times comes to the rescue by temporarily stopping the flow when the

Generated on 2024-09-30 00:18 GMT / https://hdl.handle.net/2027/uiug.30112007837898
Public Domain, Google-digitized / http://www.hathitrust.org/access_use#pd-google
Digitized by Google
Original from UNIVERSITY OF ILLINOIS AT URBANA-CHAMPAIGN

well 'sands up.' On the other hand, the flow may render human ingenuity powerless by destroying the casing and forming a veritable oil volcano, as was the case in Mexico with the famous Dos Bocas well.

The Mortenson well capper (Fig. 2), devised by A. C. Mortenson, has been used successfully in the Midway and Coalinga fields for controlling oil wells of large flow after they have 'gone wild.' It is a modification of the straight-way gate valve, differing from the latter principally in the design of the hub or barrel, which is made in two separate segments fastened together with bolts (*a*, Fig. 2). The gate *b* is nearer the upper flange, thus dividing the orifice into two chambers of unequal lengths, the larger one, *c*, having two circular openings, *d*, 4½ to 6¼ in. diam. The recess *e* is designed to allow the gate to be drawn back of the clear about three-quarters of an inch, thus making possible the clamping of the capper around the well casing without danger of damaging the gate. The lower part of the apparatus has a grooved shoulder *f* provided with hydraulic packing in order to prevent the back flow of oil or gas between the casing and the capper, there being enough space between the shoulder and the side openings to allow for the standard casing collar. The capper and casing are further secured by four anchor bolts, which pass through the lower flange at *g* into a bed of concrete around the casing, and to the upper flange are bolted screw flanges to fit different-sized casings.

A detail in the design of the capper that at times plays a very important rôle in its successful operation is the rounding of the lower edge *h* of the groove into which the gate fits; because of this provision, whatever sand may be forced into the groove when the gate is being closed is easily washed down, thus permitting the gate to be closed tight. The apparatus is manufactured in different sizes: that adaptable to 6¼-in. casing weighs about 1600 lb., the 8¼-in. about 1600 lb., and the one for a 15½-in. casing is estimated to weigh 3600 pounds.

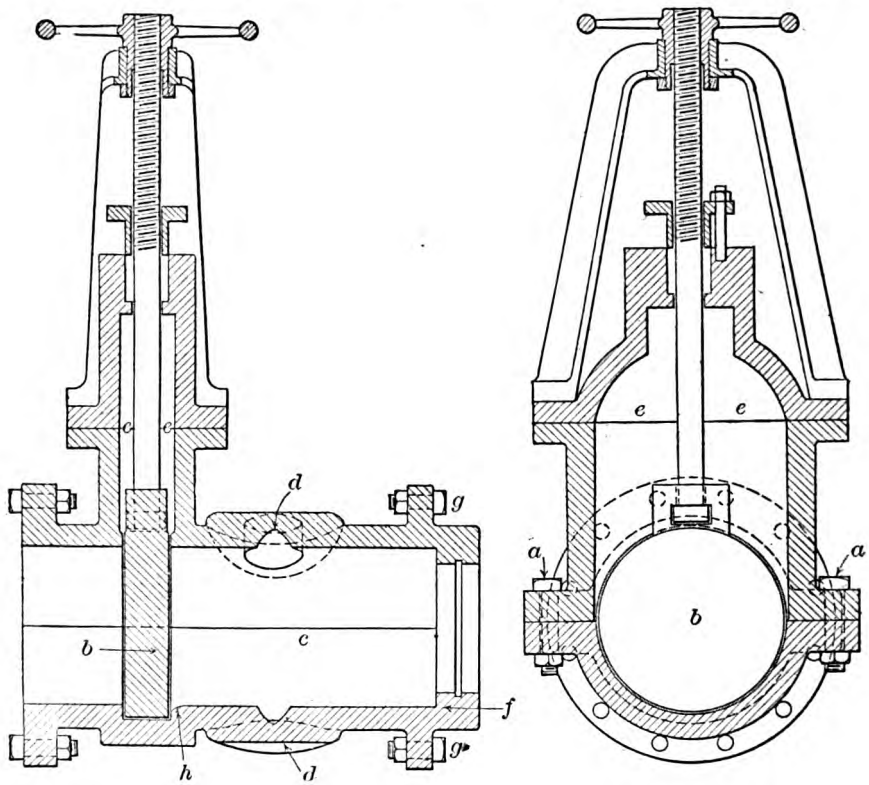

FIG. 2. MORTENSON WELL CAPPER.

Generated on 2024-09-30 00:19 GMT / https://hdl.handle.net/2027/uiug.30112007837898
Public Domain, Google-digitized / http://www.hathitrust.org/access_use#pd-google
Digitized by Google
Original from UNIVERSITY OF ILLINOIS AT URBANA-CHAMPAIGN

In order that the sand usually accompanying the oil in the California fields may not wear out any metal cap placed on the T, an oil cushion is provided. This consists of a pipe about 8 ft. long, having a tight hardwood plug and a cast iron screw cap on the opposite end. This chamber is constantly full of eddying oil and sand, and thus affords a yielding cushion that effectively retards the velocity of the sand grains and minimizes their wearing action. The wooden plug affords added safety, as it is not as quickly attacked by the sand as an unprotected metal cap. To the other opening of the T are connected the necessary fittings to divert the flow into as many channels as needed, and additional oil cushions may be provided if added safety is required.

The peculiar design of the apparatus suggests at once its mode of operation. If the uppermost joint is sound and the top of the casing is accessible, the two segments of the capper are readily bolted together around the casing collar. This operation presents no difficulties, as at no time is the flow of oil disturbed in any way, which is the essential difference and advantage of this method compared with those which necessitate partly obstructing the flow of gas or oil before the apparatus is placed in position. The necessary nipples, gates, etc., are connected to the side openings to take proper care of the oil when the flow is diverted laterally by closing the gate on the capper. Once this is accomplished the connections on top of the capper are made without delay, as the side outlets are intended to take care of the flow only temporarily. The fittings generally used are an 18-in. nipple, directly over the capper, a two-way T, and whatever additional nipples, valves, etc., are needed to divert the flow as desired.

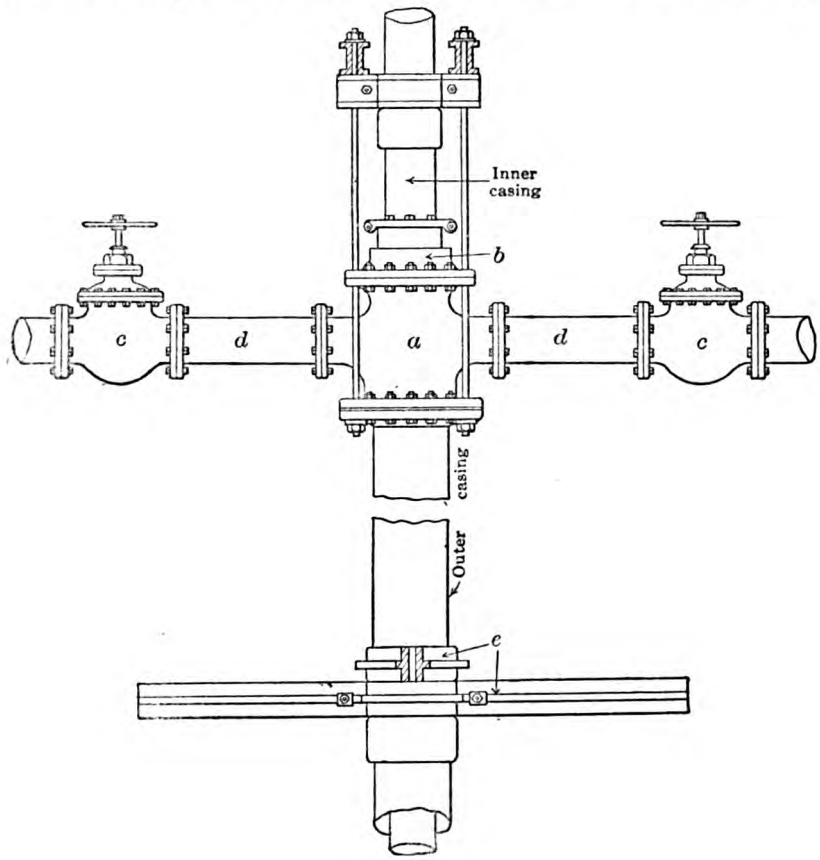

FIG. 3. DEVICE FOR CAPPING A GASSER.

If the uppermost joint is damaged, a hole is dug around the casing and the apparatus

Generated on 2024-09-30 00:18 GMT / https://hdl.handle.net/2027/uiug.30112007837898
Public Domain, Google-digitized / http://www.hathitrust.org/access_use#pd-google
Digitized by Google
Original from UNIVERSITY OF ILLINOIS AT URBANA-CHAMPAIGN

is clamped to the first sound joint. As an added precaution, the excavation may be filled with concrete and the capper secured by means of the anchor bolts. After the side connections have been made, the upper joint

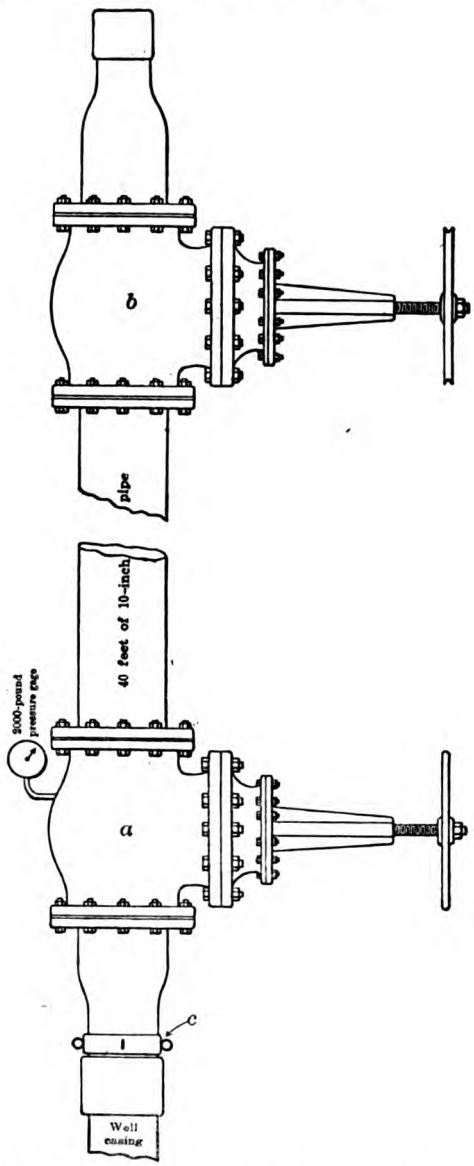

FIG. 4. SPECIAL APPARATUS FOR CAPPING A GASSER.

of casing is unscrewed and raised above the gate within the body of the capper to allow the closing of the gate, and thus divert the flow to the lateral openings.

When the top connections have been made, the gate of the capper is opened slowly to allow some of the oil to flow through the capper and test the upper connections, and if these are found safe the gate is entirely opened. The gate valves attached to the side connections can then be closed without trouble, thus placing the well under perfect control.

This method has been found effective in controlling oil wells on fire, since if it is possible to reach the casing one or two joints below the mouth of the well, the flow of oil can be diverted through the side openings and allowed to discharge at any safe distance away from the well. In this operation, after the upper joints have been unscrewed, it is best not to remove them from the capper, but to lift them just enough to allow the closing of the gate, the design of the apparatus permitting such operation. After the Pacific Crude gusher in the Midway field had caught fire it was subdued by the method outlined.

The method described below, devised by J. A. Pollard, has been used successfully in the Buena Vista hills for capping some gassers at which no provision had been made for controlling the flow through the inner casing or between casings. As the flow was mainly from the inner casing, it was decided to eliminate the chance of the gas flowing between casings after the inner casing had been closed by first placing the equivalent of a blow-out preventer apparatus on the outer casing. An operation of this sort embraces the following general features: A device (Fig. 3) with a special cast iron four-way T, *a*, with stuffing box, *b*, heavy gate valves, *c*, connecting nipples, *d*, etc., is built up. This is raised about 10 ft. over the casing head, and by means of guy ropes is then lowered to the casing, over the stream of gas, and bolted to the casing head. The valves are then partly or entirely closed. The outer casing is next anchored by means of the clamps, *e*, embedded in concrete, the inner string being secured to the T with the clamp-and-bolt arrangement shown in the figure.

After provision had been made in the manner described to prevent possible flow between casings, the operation proper of capping the gasser was carried on as follows: An apparatus (Fig. 4) was assembled that was made up of two special valves, *a b*, weighing about 4700 lb. each and connected by about 40 ft. of 40-lb. 10-in. cas-

Generated on 2024-09-30 00:22 GMT / https://hdl.handle.net/2027/uiug.30112007837898
Public Domain, Google-digitized / http://www.hathitrust.org/access_use#pd-google
Digitized by Google
Original from UNIVERSITY OF ILLINOIS AT URBANA-CHAMPAIGN

ing. Swage nipples reduced the diameter of the apparatus to that of the well casing. The lower valve was provided with a pressure gauge, as shown in the figure. The apparatus was assembled on the ground, the valves being left open to insure free passage for the gas. A collar, *c*, with four rings, was placed in its lower part, and to the rings were attached guy lines that passed through blocks generally made fast to the legs of the derrick. Under the collar on the upper end of the apparatus was clamped an elevator, and to this was attached a wire about 30 ft. long, having its other end tied to the hook of the casing block or to any other suitable block-and-tackle arrangement. The hook was not attached directly to the elevators, as the great bulk of the block would obstruct the passage of the stream of gas. The apparatus was raised about 10 ft. above the casing head, where the stream of gas was less compact, and by means of the guy lines and blocks was then lowered to the casing and screwed in place. The flow of gas offered comparatively small hindrance to this operation, as the valves of the apparatus were wide open and the diameter of the apparatus was larger than that of the casing. Care had to be exercised in bracing the apparatus before releasing the wire line attached to the elevator, so that the vibration caused by the gas would not damage the connection to the well casing. After the apparatus had been screwed in place the valves were closed, thus controlling the flow. The upper valve was provided with a grooved wheel, round which was wound a wire for controlling its operation from the derrick floor.

In case it is desired to 'kill' the gas after the flow has been controlled in the manner just described, the following method can be employed: When the apparatus mentioned above has been put in place, as described, the lower valve is closed and the 40 ft. of 10-in. casing is filled with muddy water with a pump capable of developing a pressure of 500 lb. per square inch and fitted with valves that can operate in water containing 40% of solids. The upper valve is then closed and the lower one opened, thus equalizing the pressure throughout the column of liquid, and the mixture of clay and water drops to the bottom of the well. The lower valve is again closed and the upper one opened, thus permitting the escape of the gas above the lower valve, but preventing an increase in pressure from the muddy water pumped in. The operation is repeated until the weight of the muddy water pumped in is enough to overcome the gas pressure, a condition that will be indicated by the pressure gauge attached to the lower valve. Both valves are then opened, and the well is filled with the mixture, which is afterward forced into the gas or oil stratum with the pumps. When it is found that no more mud can be pumped in, pumping is suspended for about three hours. It is then resumed until no more mud can be forced into the well. The pressure on the pump is maintained for a few hours, after which it is released slowly, as a sudden removal of pressure might cause the quick ejection of all the material pumped in. The procedure outlined will plaster up the gas or oil stratum with an impervious wall of clay, and the gas or oil thus excluded will not interfere with the further drilling of the well to the oil or gas-sands below. If it is subsequently found advisable to recover the gas or oil excluded, this can be accomplished by perforating the casing opposite the clay-plastered beds and reducing the pressure inside the well or bailing out the water and mud.

Fuel Consumption in Motor-Ships*

As a number of motor-ships have now been in extensive operation for some time, it is possible to arrive at the exact figures relating to the fuel consumptions which have been obtained in practice, and these are of interest not only from their relation to coal consumption on steamships, but also in reference to their deviation from the results which have been obtained in shop tests.

Probably too much has been made, generally among interested parties, of the differences which have been exhibited by different types of engines, and in particular by the four-cycle type, on the one hand, and the two-cycle motor on the other. It is

*Abstract from Engineering Supplement, London *Times*.

Generated on 2024-09-30 00:18 GMT / https://hdl.handle.net/2027/uiug.30112007837898
Public Domain, Google-digitized / http://www.hathitrust.org/access_use#pd-google
Digitized by Google
Original from UNIVERSITY OF ILLINOIS AT URBANA-CHAMPAIGN

only by a careful examination of the various methods of operation of Diesel engines that it becomes evident that in many cases the consumptions given are quite dissimilar and do not permit of direct comparison. For instance, it is quite common, in fact almost general, to give these results in the form of fuel consumption in pounds per brake horse-power hour without any special reference to the method of driving the auxiliaries which are necessary in connection with every Diesel engine installation.

In some motors the air-compressor is driven direct by the engine, but in others it is entirely separate, while in a third type one stage of the air-compressor is driven by the main motor, and the low-pressure and intermediate pressure stages are themselves separately operated by an auxiliary Diesel engine. Under these conditions, therefore, it is obvious that to obtain a fair comparison between the many types of engines is by no means easy, and particularly is this the case when comparisons are made also with two-cycle motors and four-cycle engines. While, however, in all the existing two-cycle engines which have yet been put in service on ships the scavenging pumps are driven direct by the engine, it is certain that in the larger types, or at any rate in some of them, those pumps will be separate and so again complicate the actual fuel consumption per brake horse-power hour.

It might be thought, in view of these difficulties, that it would be advisable to calculate the consumption based on the indicated horse-power of the engine; but here again the difficulty arises of the different mechanical efficiencies of the various types of motors. Possibly where it is desired only to arrive at scientific comparisons between different engines, this method might be advocated, but after all, since such a matter is more or less a commercial one, it is essential for the users themselves to know what the consumption of an engine is in terms of the actual useful power developed by that engine.

After a thorough examination of the various results which have been obtained, and taking into consideration all the various factors which influence the problem, it is now possible to state fairly definitely that—speaking in a general manner so as to include practically every type of marine oil-engine which has been put into service—the fuel consumption per brake horse-power hour is always between 0.4 and 0.46 lb. In view of the varying circumstances which arise in actual service, it is not too much to say that the range of difference is much less than has been anticipated, and to a large extent is negligible when the variations between these figures and the corresponding consumption of steamships are considered. It seems that the difference between two-cycle and four-cycle engines in fuel consumption is not so great as to be an absolutely deciding factor in the development of the two designs. Probably it varies between 5 and 10%, being, of course, in favor of the four-cycle motor.

The figures given above for the fuel consumption may be taken in the case of ordinary cargo vessels or tank boats to include the necessary fuel for the operation of the few auxiliaries which have to be working while the ship is at sea. In certain instances a figure so low as 0.39 lb. per brake horse-power has been obtained for the engine alone, but this is somewhat exceptional and applies only to four-cycle engines.

It will be seen, therefore, that the anticipation with regard to the fuel consumption of oil-engines of the Diesel type has been borne out in practice, and that the fear expressed by many that the shop tests would not form a true criterion of actual fuel consumption at sea has not been justified.

On the other hand, it seems unlikely that there will be any considerable decrease in fuel consumption as the development of the Diesel engine continues, since it is not in any question of principle that improvements will be made, but rather in constructional details which will facilitate operation and increase the reliability without adding to the efficiency of the engine as a marine motor. This is somewhat in contradistinction to the development of the steam-engine, which as time has progressed has become a much more efficient machine than it was when it was originally produced for marine work. There is nothing in a Diesel installation corresponding to such improvements as the adoption of condensers, the use of superheated steam, the employment of feed-water heaters, and similar details, all of which have added considerably to the efficiency of steam-engines. A better fuel consumption with internal combustion engines appears probable only in the event of an entirely

Generated on 2024-09-30 00:18 GMT / https://hdl.handle.net/2027/uiug.30112007837898
Public Domain, Google-digitized / http://www.hathitrust.org/access_use#pd-google
Digitized by Google
Original from
UNIVERSITY OF ILLINOIS AT
URBANA-CHAMPAIGN

new heat cycle being developed, of which at present there is no indication. Even as the sizes of marine oil-engines increase, there will not be a very large reduction in specific fuel consumption, as is the case with steam-engines and steam turbines. and this is already noticeable in the motor-ships which have so far been built. For instance, in a vessel which has an engine of only 500 hp., the consumption per brake horse-power hour is but slightly different from one in which the total power is 2500 hp. Even when the very large Diesel engine for battleships develops power up to 12,000 and 15,000 hp., it is not likely that the fuel consumption per brake horse-power hour will drop much below the figures of the small motors.

Comparative Costs in Road and Pavement Work*

By FRED L. MacPHERSON†

ALTHOUGH the cost of roads and pavements naturally varies greatly in each city or district, depending on local conditions, labor, and materials, a comparison of the average prices obtaining in the vicinity of Burnaby, British Columbia, may be interesting.

MACADAM ROAD.—Initial cost, 80c. per sq. yd.; annual cost of oiling, 0.02c. per sq. yd.; average annual cost of maintenance during the first three years of life, 11c. per sq. yd.; cost applied over three years, $1.19 per sq. yd.; cost of scarifying and resurfacing usually necessary at the end of three years, 32c. per square yard.

This means that in the fourth year of its existence an ordinary macadam road, under average conditions, has cost $1.50 per sq. yd., and even then it is far from being a permanent structure, being still susceptible to patching, scraping, oiling, and resurfacing continually, thus increasing the cost of the road until, at the end of the fifth year or so, the macadam road has cost as much, if not more than, the initial cost of a bituminous pavement for which a usual five years' guarantee is given, and which is likely to last twice that time with comparatively little maintenance cost.

Further figures may be conclusive evidence of the extravagant construction of ordinary macadam roads. During the last three years there has been spent on our two principal highways, Douglas road, 6¼ miles in length, $110,000, and Kingsway, 4¼ miles in length, $60,000. The latter is now being reconstructed at a total estimated cost of $400,000, for which the maintenance (except the cost of cleaning) of the actual pavement will cost the municipality practically nothing during the next ten years. Had this road not been paved, the repairing, resurfacing, oiling, etc., during that time would have cost $50,000—a very conservative estimate. Unless for purely residential streets, where it best fulfills its purpose, the ordinary macadam road should be a thing of the past. The present policy of borrowing money for 40 years for building roads with an average life of three years, and maintaining such roads out of revenue expenditure, seems to be radically wrong. An ordinary macadam road, far from being an asset, is nothing short of a burden, under such conditions.

The average cost of other pavements dealt with are:

	Per sq. yd.
Concrete pavements	$2.00
Hassam pavements, 6 in. thick	2.25
Granitoid pavements, 7 in. thick	2.65
Brick on city streets on 6-in. concrete	3.75
Brick on rural roads on 4-in. concrete	2.75
Dolarway pavement	2.20
Bituminous pavements:	
On concrete base	2.60
On old macadam base	1.25
On new macadam base	1.80

Based on an average cost of $25,000 per mile, 100 miles of bituminous pavements built on existing macadam or gravel roads in Burnaby would cost $2,500,000. While the initial cost of such work seems alarming, the investment should be a sound one if spread over a period of about five years, inasmuch as the work would be permanent, the average annual cost of maintenance, say, $50,000, at the end of that period would be practically eliminated and the needs of every district amply served.

*Abstract from *Canadian Engineer*, August 21, 1913.

†Municipal Engineer, Burnaby, British Columbia.

Generated on 2024-09-30 00:17 GMT / https://hdl.handle.net/2027/uiug.30112007837898
Public Domain, Google-digitized / http://www.hathitrust.org/access_use#pd-google
Digitized by Google
Original from UNIVERSITY OF ILLINOIS AT URBANA-CHAMPAIGN

Although on first consideration such an undertaking would appear to be stupendous and financially impossible for any ordinary municipality, the issues at stake are so serious, and the necessities so imperative as not only to deserve mature consideration, but also to demand prompt action. Permanent initial construction is the proper policy for any municipal government authorities to adopt. Municipal bodies are active in the permanent road policy, but unfortunately the action is not concerted enough, and the results are therefore disappointing and ineffective.

The proper administration of highways is a prominent feature of road economics which has not had the earnest consideration locally which its great importance deserves. In view of the increasingly urgent demands for the opening up of new roads for settlers, and the improvement of existing residential roads, a municipality should not altogether be saddled with either the construction or the maintenance of through highways. Such roads and the roads to which they link up should be under a highway commission, composed of engineers and representatives of some more permanent public bodies, such as is in vogue in England and in portions of eastern Canada and the United States. The adoption of such an administration would assuredly make for uniformity and continuity of construction, and result in a more even and equitable assessment of expenditures involved.

The provincial governments appear to be alive to the situation and have adopted progressive permanent measures in their road construction policy. Financial assistance is now given chiefly for permanent work, and, locally, Burnaby and South Vancouver have reason to be grateful for the material assistance received in the permanent paving of Kingsway.

Measuring the Sewage of Sacramento*

SEWAGE flow and variations in flow in Sacramento, California, were determined recently by a rated differential mercury gauge connected to the convex and concave sides of 90° reducing bends on the suction lines of the centrifugal pumps which lift the sanitary sewage into the Sacramento river. The gauges were calibrated by weir measurement of flow in a 5-ft. outfall below the pumps. The work was carried out in connection with sewage-disposal investigations of the State Board of Health, which covered also a study of the river flow, relation between water consumption and sewage flow, chemical analyses of sewage, the capable-of-settling suspended matter after certain periods of standing, amount and character of screenings removed by a 40-mesh screen, industrial wastes and the sanitary effect on the river, and extent of the pollution. All the sewage of Sacramento is conveyed to the sewage-pumping station at Front and U streets, where five Byron Jackson centrifugal pumps are driven by three 9 by 18 by 14-in. tandem-compound Ideal engines and two smaller vertical cross-compound Garratt engines.

During the tests for flow, the readings of sewage pumped were taken on the mercury gauges at least every hour; at the same time readings were taken of the water-level in the sewer above the pumps. The sewer had been gauged previously for capacity, so that the rate of pumping was reducible to flow-rate by applying a correction represented by the increase or decrease in the water-level in the sewer.

Owing to the stoppage of openings, the Pitot tube was considered unfeasible for use in sewage and the suggestion to use the suction bends was obtained from thesis experiments made by Messrs. Sooy and Jacobs of the University of California, working in the private laboratory and under the personal direction of Buckner Speed, of Berkeley. They determined that the difference in pressure between the convex and concave sides of 3½, 4, and 6-in. bends could be relied upon as a measure of discharge within 2% error. The formula derived from their experiment is:

$$V = C \sqrt[n]{h\,r/d}$$

where Q = discharge in second-feet; a = area of net cross-section in square feet; h = difference of pressure, or head in feet; r = mean radius of the bend in feet; d = internal diameter in feet; n = an exponent

*Abstract from *Engineering Record*, August 16, 1913.

Generated on 2024-09-30 00:18 GMT / https://hdl.handle.net/2027/uiug.30112007837898
Public Domain, Google-digitized / http://www.hathitrust.org/access_use#pd-google
Digitized by Google
Original from UNIVERSITY OF ILLINOIS AT URBANA-CHAMPAIGN

$=1.9$ for small bends; A B and $C=$ constants.

For the range of experiments made, $C=$ 5.58 for a 6-in. elbow, 5.61 for a 4-in. elbow, and 5.74 for a 3½-in. elbow. These experiments were performed under conditions of straight approach and discharge on uniform-diameter small 90° bends. At Sacramento the only elbows available were the horizontal reducing elbows on the centrifugal pump suctions where the suction lines enter the pump, thus giving rise to the effects of constricting flow, negative head, and runner rotation. Furthermore, the bends were much larger than those experimented with, one being 30 in., two 27 in., reducing approximately 3 in., and two 18 in. diameter. The 18-in. bends were non-reducing. Each pump gauge was actually calibrated by making simultaneous readings of pressure on the differential gauges and the head on a special measuring weir constructed in the outfall sewer below the pump.

The differential gauges were made at the city sump and consisted of ½-in. glass mercury tubes and ⅜-in. piping tapped into the bends on a horizontal plane through the diameter and as near the centre of curvature as possible. Special care was taken to make the taps perfectly normal, although it is stated that this was difficult of attainment. The engineers suggest that the best results are obained if the pipe taps do not pierce the shell but are merely deep enough to permit good thread connections. The remaining thickness should be pierced by a small drill entering truly normal. The readings were taken in centimetres, the millimetre being a fairly close graduation and quickly read.

Much trouble was experienced due to the action of sewage gases, probably hydrogen sulphide, on the mercury. In the course of a few minutes a skin would form on the surface of the mercury otherwise clean, which made readings almost impossible. This difficulty was not overcome entirely, but was remedied by pouring a small quantity of alcohol in each leg, which had the effect of dissolving, or at least preventing the adhesion of the mercury skin to the glass. However, the alcohol soon colored so highly that it was impossible to read the meniscus of the mercury, and most of the readings were taken at the periphery of its surface.

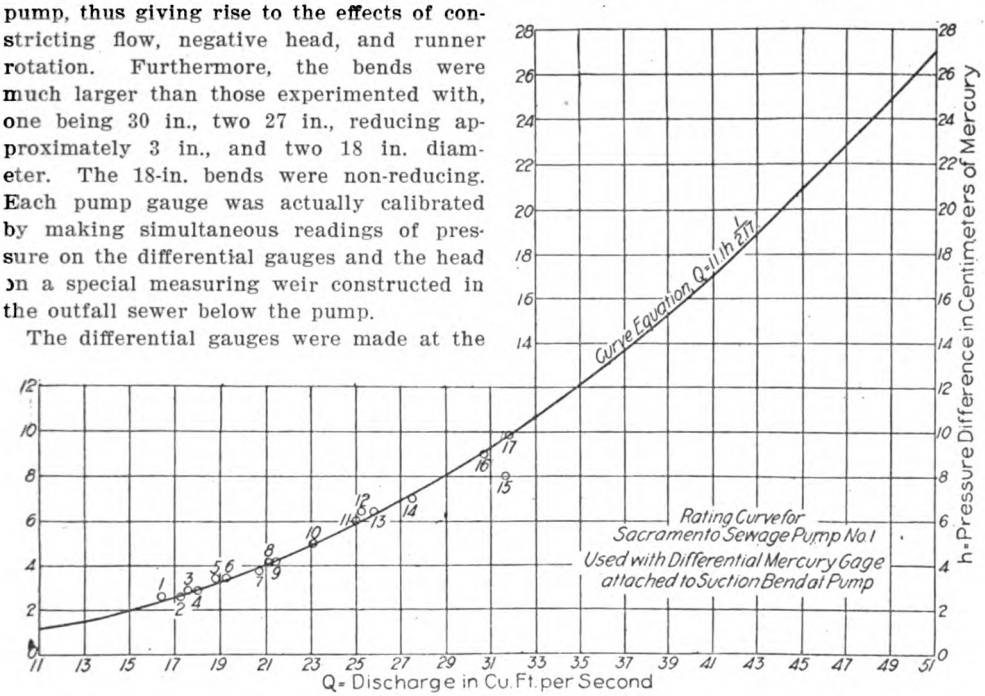

RATING CURVE FOR SEWAGE PUMPS.

The weir in the outfall was of the sharp-edged type, with end contractions set in a bulkhead braced in a gate chamber about 500 ft. below the city pumping station. The scheme included a baffle wall set in the circular sewer about 15 ft. upstream to break up the high velocity of approach, about 2 ft. per second. This arrangement, finally abandoned, soon clogged with newspapers and other floating material, in spite of the fact that the sewage had passed through a 1½-in. bar screen.

Much difficulty was experienced in devising a satisfactory means of head measurement. The first arrangement consisted of

Generated on 2024-09-30 00:19 GMT / https://hdl.handle.net/2027/uiug.30112007837898
Public Domain, Google-digitized / http://www.hathitrust.org/access_use#pd-google
Digitized by Google
Original from UNIVERSITY OF ILLINOIS AT URBANA-CHAMPAIGN

a 1-in. pipe extending through the weir bulkhead upstream and capped at the upper end. There were two pairs of ⅛-in. perforations about 1 ft. from the top. On the downstream side a 60-ft. length of hose, laid on the invert, was led beyond the sewer outfall mouth and back on the river bank, where it connected with a stilling chamber consisting of a cylinder 8 inches in diameter by 3 ft. high. A gauge glass was attached to the outside of this cylinder and readings of the water-level in the tube were taken on a scale board set behind it. On account of gas formation in the sewage in the hose and the absence of any grade, which made it difficult for the hose to free itself from gas accumulations, it was impossible to get correct readings of head. Finally, however, a quite satisfactory scheme involving electrical contact was rigged up.

As shown in the accompanying drawing, the electrical device consists of a 4-in. pipe set vertically on the upstream face of the bulkhead to act as a stilling chamber. The head was transferred to this pipe through a 1-in. capped and perforated pipe, about 4 ft. long, directed upstream.

In order to make it possible to read the gauge in a pleasant atmosphere, the scale board was placed at the top of the gate chamber. An inverted bottle, weighted with mercury, with a needle in its cork, was hung by a piece of phosphor-bronze wire passing over a pulley and down in front of the scale board. An electrical circuit was run from the 4-in. pipe through a sensitive voltmeter and four small dry cells, also connecting with the wire from which the needle and bottle weight hung. A circuit was completed when the needle touched the sewage level, as indicated by a deflection of the voltmeter needle. The readings of a fixed mark on the scale board gave the head on the weir.

A rating curve for the weir was calculated by the Francis formula for end contracted weirs, and by the Hamilton-Smith formula and coefficient. Velocity of approach was considered in the proper way for both calculations. A mean curve was used.

In calibrating the mercury gauges the rate of pumping was varied by changing the steam pressure, hence the revolutions per minute, and by varying the head pumped against by opening and closing, as desired, a gate on the discharge line. After any change it required about twenty minutes for conditions to become normal at the weir.

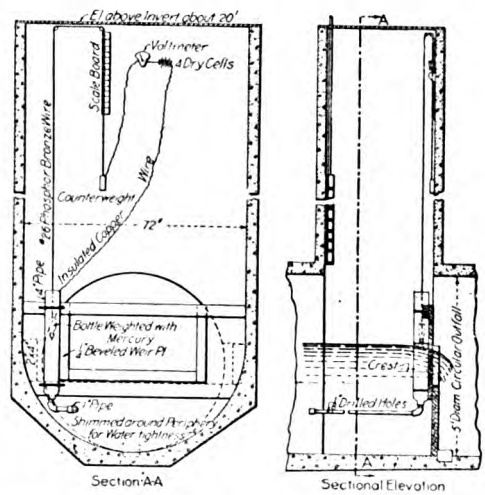

SECTIONAL ELEVATION OF MEASURING WEIR.

On account of the fact that a weir large enough to carry the maximum rate pumped could not be constructed, it was necessary to experiment on low heads and exterpolate the curves by the formulae for the usual running conditions. It is not thought, however, that any other influence would come in than the velocity in the bend. A precision greater than 5% was of no value.

These investigations were carried out by C. G. Gillespie, acting under the direction of Charles Gilman Hyde, of Berkeley, California, consulting engineer to the State Board of Health.

Generated on 2024-09-30 00:18 GMT / https://hdl.handle.net/2027/uiug.30112007837898
Public Domain, Google-digitized / http://www.hathitrust.org/access_use#pd-google
Digitized by Google
Original from UNIVERSITY OF ILLINOIS AT URBANA-CHAMPAIGN

Strength of Long-Seasoned Douglas Fir and Redwood*

By ARTHUR C. ALVAREZ

SINCE there is very little actual test data on the strength of structural timber that has been air-seasoned for a long time, the following results are published for the purpose of showing the effect on its strength of a long period of use in a building. The tests were made at the Civil Engineering Laboratory under my direction by J. R. Shields, assistant in the testing laboratory.

The specimens for these tests were selected from the wall studding, floor joists, and underpinning of a one-story frame building erected on the University of California campus in 1874, and demolished in 1911, making the age of test specimens 37 years. The wall studding and floor joists were of 2 by 4-in. and 2 by 8-in. Douglas fir, respectively; the underpinning of 3 by 4-in. and 4 by 4-in. redwood. All the Douglas fir could be classed as of No. 1 grade. All knots were sound; few knots were larger than 1 in. The redwood specimens were of similar grade. The smaller pieces of Douglas fir cut for compression and shear tests were clear timber. There was not the slightest indication of decay on any of the material. Age had merely darkened its surface slightly.

The conditions to which all the material was exposed in service are described as follows: The floor-level of the building was about 3 ft. above ground surface. Air could circulate under the floor through occasional latticed ventilators placed on all sides under the water table. The interior finish was of lime plaster on wooden lath; the exterior was painted redwood channel rustic. The building was freely exposed on all sides to light and air. For a period of about four months in the year the ground surface in the vicinity of the building in question was usually very damp, a condition favorable for the decay of the fir floor-joists, which were only 2 ft. above ground. Clearly here ventilation prevented decay. The weight of the timber as tested clearly shows the extent to which air seasoning took place under these conditions. Bending, longitudinal compression, and longitudinal shear tests were made on Douglas fir. The material available allowed of only longitudinal compression tests of redwood.

Douglas Fir Tests

1. *Bending.*—The specimens consisted of 2 by 8-in. sawed floor-joists. Twenty-five tests were made, using spans ranging from 6 to 10 ft. The tests were made on an Olsen 200,000-lb. universal testing machine. Loads were applied in increments of 400 lb. each, at the third points of the span. The speed of the machine was 0.04 in. per minute. Centre deflections were read to 0.01 in. directly by the mirror-scale-thread method.

The elastic limit and coefficient of elasticity were determined in the usual manner from deflection curves. These curves showed that the elastic limit in each case was very well defined even though the table shows it to vary greatly in amount for various beams. Up to the elastic limit the curves adhered uniformly very closely to a straight line. The fiber stress at the elastic limit was determined by $M = {}^1/_6\, fbd^2$, the usual formula for resisting moment of a beam rectangular in cross-section, where f is the intensity of fiber stress at the top or bottom of the section, b is the width of the beam, and d its depth. This formula was also used to compute the fiber stress at the maximum load. While theoretically inapplicable beyond the elastic limit, such use of the formula gives valuable comparative results. The modulus of elasticity for a beam loaded at the third points is given by $\frac{23}{1296}\frac{wl^3}{dI}$, where W is the total load applied, I the moment of inertia of the cross-section about its neutral axis, d the centre deflection, and l the span. Theoretically this formula is slightly in error in that it does not consider shearing deformations. Since the intensity of horizontal shearing stress at any point in a beam equals the intensity of vertical shearing stress, the maximum longitudinal shear in a wooden beam equals the intensity of vertical shear at the neutral axis which is given by the formula $v = \frac{3}{2}\frac{V}{bd}$, where V is the total external shearing force. Table 1 gives the results of flexure tests of Douglas fir.

*Abstract from Vol. 1, No. 2, Bulletin University of California.

Generated on 2024-09-30 00:17 GMT / https://hdl.handle.net/2027/uiug.30112007837898
Public Domain, Google-digitized / http://www.hathitrust.org/access_use#pd-google
Digitized by Google
Original from UNIVERSITY OF ILLINOIS AT URBANA-CHAMPAIGN

TABLE 1—BENDING STRENGTH, DOUGLAS FIR

Dimensions:	Av.	Max.	Min.
Section, in.		2 by 8	1.6 by 7.5
Span, ft.		10.0	6.0
Number of rings per linear inch	14.0	25.0	4.0
Weight, as tested, lb. per cu. ft.	34.4	43.9	27.5
Sapwood, per cent...	0.5	10.0	....
Elastic limit:			
Total load, lb.....	7700	12,800	3200
Fiber stress, lb. per sq. in.	6100	9,900	2660
E, 1000 lb. per sq. in.	1860	2,410	1390
Maximum load:			
Total load, lb.....	9100	16,600	2400
Fiber stress, lb. per sq. in.	7200	10,250	3220
Maximum shear developed, lb. per sq. in.	450	800	320

Ten beams failed in longitudinal shear near the supports; eight failed in tension at lower fibers due to presence of knots; five failed in tension due to cross grain; two failed in compression at upper fibers.

2. *Longitudinal Compression.*—The specimens were sawed from tested floor joists and from 2 by 4-in. wall studding. One hundred and twenty-five tests were made on pieces 2 by 2 by 8 in. The tests were made on a Riehle 100,000-lb. universal testing machine. Compressive strains were read with an Olsen micrometer compressometer reading to 0.0001 in. for load increments of 1000 pounds.

The elastic limit and coefficient of elasticity were determined from stress-strain diagrams. The elastic limit in each case was fairly well defined by the curve. The plotted points up to the elastic limit did not conform to a straight line as well as did those of the deflection curves for joist tests. However, the deviation from such a straight line in any case was not sufficient to cause any doubt as to its proper position. The results of compression tests are summarized in table 2.

TABLE 2

LONGITUDINAL COMPRESSIVE STRENGTH

DOUGLAS FIR

Dimensions:	Av.	Max.	Min.
Section, in.	...	2 by 2.2	1.6 by 1.9
Total length, in..	8.0	8.1	7.8
Gauge length, in..	6.0	6.0	6.0
Number of rings per linear inch	15.0	30.0	5.0
Weight, as tested, lb. per cu. ft.....	35.2	46.0	28.5
Sapwood, per cent..	2.3	50.0	...
Elastic limit:			
Total load, lb....	9,560	17,000	3,100
Strength, lb. per sq. in.	2,470	4,250	850
E, 1000 lb per sq. in.	3,420	5,250	1,500
Crushing load:			
Total load, lb....	27,700	35,750	13,000
Strength lb. per sq. in.	7,040	9,200	3,400

3. *Longitudinal Shear.*—The specimens were sawed from tested floor joists and from 2 by 4-in. wall studding. The specimen is bolted in place so that the top surface of its projecting lip comes completely under the sliding plunger. The lip is sheared by applying compression at the top of the plunger. The shearing area of lip was 2 by 4 in. One hundred and forty-seven tests were made, using a Riehle 100,000-lb. testing machine. All specimens failed suddenly. Only maximum loads were noted. Table 3 gives a summary of the results.

TABLE 3

LONGITUDINAL SHEARING STRENGTH

DOUGLAS FIR

Dimensions:	Av.	Max.	Min.
Shearing area, in.	...	2.1 by 2.9	1.7 by 3
Maximum load:			
Total load, lb....	7,670	12,050	2,080
Shearing strength, lb. per sq. in...	1,310	2,350	450

REDWOOD TESTS

1. *Longitudinal Compression.*—The specimens were prepared by squaring the ends, the sides being left rough as originally sawed. Thirteen tests were made on pieces 3 by 4 in. and 4 by 4 in section and from 17 to 27 in. long, using an Olsen 200,000-lb. universal testing machine. Compressive strains were read for load increments of 4000-lb. by the same method as used for compression tests of Douglas fir.

The elastic limit and coefficient of elasticity were determined from stress-strain diagrams. All specimens showed a rather well defined elastic limit. Table 4 gives a summary of the results of redwood compression tests.

The number of tests made was not large enough to justify any sweeping conclusions.

Generated on 2024-09-30 00:20 GMT / https://hdl.handle.net/2027/uiug.30112007837898
Public Domain, Google-digitized / http://www.hathitrust.org/access_use#pd-google
Digitized by Google
Original from UNIVERSITY OF ILLINOIS AT URBANA-CHAMPAIGN

However, a larger number of tests made on material from just this source, which was the only one available at the time, would not have added materially to the value of the results.

TABLE 4

LONGITUDINAL COMPRESSIVE STRENGTH REDWOOD UNDERPINNING

Dimensions:	Av.	Max.	Min.
Section, in.	...	4 by 4	2.8 by 3.7
Total length, in...	22.9	27.2	17.3
Gauge length, in..	21.5	24.0	13.0
Number of rings per linear inch	22.0	60.0	18.0
Weight, as tested, lb., per cu. ft...	29.8	32.1	26.7
Sapwood, per cent..	0.3	2.0	...
Elastic limit:			
Total load, lb....	58,000	70,500	39,900
Strength, lb. per sq. in.	4,600	5,700	3,500
E, 1000 lb. per sq. in.	1,450	2,040	950
Crushing load:			
Total load, lb....	68,000	88,450	45,000
Strength, lb. per sq. in.	5,400	6,350	4,350

A comparison of averages from the above test results with those given in table 2, page 21, U. S. Forest Service Bulletin 108, on similar timber air seasoned for two years, shows the following conditions to obtain.

1. Small pieces of the long seasoned Douglas fir without defects are 490 lb. per square inch stronger in longitudinal shear than two-year air-seasoned material, which has an average resistance of 822 lb. per square inch. This represents an increase in shearing strength of about 60 per cent.

2. The modulus of elasticity in bending for the long seasoned Douglas fir is 20% higher.

3. The fiber stresses at the elastic limit and at the maximum load for the long seasoned material are respectively about 30 and 13% higher.

4. The maximum crushing strength in compression longitudinally is 40% higher for the long seasoned Douglas fir, but its elastic limit is 30% lower.

5. The longitudinal crushing strength of the long seasoned redwood is 25% greater.

In conclusion, the well preserved condition of the floor joists shows that proper ventilation will prevent the decay of timber that is exposed to a damp atmosphere. The absence of dry rot in the wall studding shows that air has sufficient access through channel rustic to prevent it. Under favorable service conditions, such as in the ordinary frame building, sound heart timber in pieces of moderate section gradually gains in strength and stiffness through air seasoning.

Instructions for Diesel Engineers*

By JOHN PIERCE

IT is not my purpose to depreciate the erecting engineer, nor to establish a record as an authority in the following, yet I know there must be others who have experienced the same feelings that I have when first starting to operate a Diesel oil-engine. The printed instructions for this engine are very few, and contain but little of benefit to the inexperienced Diesel engineers.

The cams are all keyed to the camshaft, so first set the shaft as follows: Place No. 2 crank on the dead firing centre, and place the mark, found on the side of the fuel nose of No. 2, 1/32 in. ahead of the cam roller; not the centre of the roller, but ahead of the circumference, as shown in Fig. 1. For this purpose it is better to keep a new roller always on hand, which can be replaced by the old one after the shaft is set; for this roller, being used for this purpose, must be full size and perfect. When this has been done, being very careful that the spring tension on the fuel rod does not cause the camshaft to turn, the intermediate gear is slipped into place and secured. Of course, this can be done by using either No. 1 or No. 3, as well as No. 2; only No. 2 is the most convenient to get at, as it is almost impossible to get at the others for this adjustment.

First raise the governor to its highest position, and then turn the pump eccentric shaft with the crank until eccentric No. 1

*Abstract from *Practical Engineer*.

Generated on 2024-09-30 00:23 GMT / https://hdl.handle.net/2027/uiug.30112007837898
Public Domain, Google-digitized / http://www.hathitrust.org/access_use#pd-google
Digitized by Google
Original from UNIVERSITY OF ILLINOIS AT URBANA-CHAMPAIGN

is in its highest position. Then slip an ordinary shipping tag between the roller on the suction valve arm and the top of the suction valve stem. If it is not a snug fit, the rod should be shortened or lengthened, as the case may be, until a snug fit is secured. Care must be taken to see that the spring raises the suction valve to its extreme length before making the measurement.

No. 1 having been adjusted, No. 2 and No. 3 are to be treated in the same manner. The erecting engineer who came with the engine which I am operating set the working stroke of the pump so that it had reached its maximum pressure and was backing away on its suction stroke when the fuel needle opened and the engine took fuel. But I have found, by careful experiments, that an engine maintains its closest regulation by turning it until either of the fuel noses is just at its proper position to touch its respective fuel rod roller, and so sets the pump that it has completed two-thirds of its delivery stroke to that respective cylinder. Then the maximum pressure is being applied at the instant the needle opens. With the erecting engineer's adjustment this point was passed when the needle opened, and the fuel fed to the cylinder was to a certain extent withdrawn, or pressureless, causing a decided drop in speed under peak load.

In order to set the pump, one must take the cover off the gear side and remove the main gear and spring. Turn the engine until No. 1, No. 2, or No. 3 fuel nose is just touching its respective roller. Then turn the pump eccentric until the stroke of that pump has completed two-thirds of its delivery stroke, hold it in this position and insert the gear, being careful that the clutch dogs will come exactly together; replace the spring and cover, and the pump is properly adjusted.

It is better, according to my experience, to get cut rings for the needles directly from the engine-makers, as it is to their interest to supply the best for this purpose. At first I thought differently, and so sent to a high-grade packing concern, who assured me that they made the best packing for this purpose. I used their material, to my sorrow, for it contained white lead, which, freed by the action of the fuel, went into, or rather between, the atomizer and the needle, causing the needle to stick in the atomizer, pulled the atomizer off its dowel pin, and let all the air get away, shutting down the engine. I had to dismantle the entire cage, take the nozzle off, and saw the needle in two, in order to get the atomizer out, having to take it out the front end. Since then I have used a different make, but with poor success, so I sent to the builders direct, and have since had no trouble from that source.

The proper way to pack the needle, according to the printed instructions of the builders, is to soak the packing in oil and graphite for a week prior to using it; but this is not a good plan. It is better to pack with dry packing, then slip the needle out, and with a rag on the end of a wire, swab out the inside of the rings thoroughly with a mixture of half cylinder oil and half graphite. Do this once a week, loosening the gland slightly, but not enough to allow the atomizer to get out of place when the needle is withdrawn. This will, in a short time, give both the needle and the packing a highly polished surface, which will stay tight.

It is better to have on hand a complete admission valve, for these valves have a large area and leak very readily. Therefore, it is better to have the extra one complete, and each week take off, first, say No. 1, and put on the extra one. During the week the one taken off can be ground in and got in shape for use. The next week take off No. 2, and the third week No. 3. This gives a new-ground valve every three weeks. The exhaust valve will give but little trouble, except breaking a spring frequently; but as these cost practically nothing, one should keep a large supply of them on hand.

To set the air-admission valve, turn the engine until the air-valve cam is at its low-

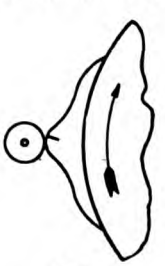

FIG. 1

est part, then with a bar raise the roller arm. There should be 1/16-in. clearance between the roller and the cam when the lever inside the cage makes contact with the fibre disc.

Generated on 2024-09-30 00:20 GMT / https://hdl.handle.net/2027/uiug.30112007837898
Public Domain, Google-digitized / http://www.hathitrust.org/access_use#pd-google
Digitized by Google
Original from UNIVERSITY OF ILLINOIS AT URBANA-CHAMPAIGN

To set the exhaust valve the engine is turned until the exhaust cam gets to its lowest point, and then there should be 1/16-in. clearance between the nuts at the bottom of the valve stem and the top of the cam rod. Adjustment is made by moving the nuts on the valve stem itself and not on the cam rod. The fuel rod should be adjusted while the engine is running, and there should just be daylight between the fibre disc and the needle lever when the rod is down. Fuel noses should be examined once a week to see that they do not work loose. A drop of heavy oil should be put in the dashpot once each 24 hours. I have found that by taking off the ⅛-in. fittings on the dashpot and tapping for and using ¼ in., I get a quieter working pot.

The beginner will learn that unless he is lucky enough to find the right way, packing the delivery side of the oil pump is a hard proposition. The proper way to do this is to take out the two screws in the pin holding the plunger to the eccentric and turn the eccentric shaft until the one being packed is at the bottom of its travel. Then take out the plunger itself and the packing is easily removed. Then replace the plunger and pack. Insert the gland, and place two equal-sized pieces of metal one on either side of the plunger, push the gland nut up against them, and turn the eccentric, forcing the packing up into the stuffing-box. One will be able to get in considerably more packing this way. Set this packing up tight. The suction side should be packed lightly, using a packing free from rubber or white lead.

Until the pipes are perfectly free of foreign matter the atomizer should be examined once a month, but after three months it need not be touched more than once every four months. The strainer in oil lines should be cleaned at least once a week, thus insuring clean oil and plenty of it.

The amount of oil and water used in the crank-case must be governed by circumstances. In some engines more water is evaporated than in others. I find, by taking a little oil on a stick and going to the light, that the oil shows a greenish cast as long as it is good, but when it shows a dead black it is full of carbon and dirt, and the crank-case must be cleaned. Clean the case and bearings thoroughly, and put in new oil. The builders advise a certain amount daily, but in my case I use ½ gal. per crank each 24 hr., also 18 gal. of water. One very particular thing to remember in starting and stopping is to shut off the water going over the needle before stopping, and not starting the water until the engine has been started, for if the drains should be a little clogged, the water will back up through the exhaust and into the cylinder.

The jacket water should be kept on for 15 minutes after stopping. One should have a set of high-pressure fittings and a hand oil pump, with plug cock between it and cylinder, on each of the cylinders, so that as soon as the engine is stopped, a pint of kerosene can be forced into the rings to cut loose any carbon formed there. These pumps can be attached by using indicator taps. While doing this, be certain the air-admission release levers are up, so that the vapor and gas can escape.

For safety's sake, as well as convenience, my circulating pump has an alarm gauge attached, so in case the water supply is stopped I am instantly warned. Also, I have extension tube thermometers on my water outlets, with alarm connections, so that I may know from a distance of any heating. The admission valve cage screen should be wrapped with cheesecloth, and this changed once a week, being careful when changing that no dirt gets into the dashpot or valve. Before starting, it is well to take a bar and test the needles to see that they are not sticking.

To the prospective buyer I would say, get a coupling (flexible), and direct connect to the engine shaft; it is the only perfect way. We have tried motor, belt, and direct connection. In the union in the intermediate air line just before it enters the high-pressure cylinder insert a fine-woven wire screen. This will save lots of trouble in the way of dirt getting in the high-pressure valve, causing numerous shut-downs and scoring the valve.

The erecting engineer will tell you to use the unloaders according to your load, but I have found it better to keep them both closed and bleed my high-pressure line at the cock invariably placed below the check valve at the base of the bottles, and keep my air as I want it by regulating this cock. This also serves to blow out the condensation, gummy oil, and dirt that would otherwise be carried into the bottles. I simply attach a small hose to this cock, and blow the stuff outside. If possible, keep the air-

Generated on 2024-09-30 00:20 GMT / https://hdl.handle.net/2027/uiug.30112007837898
Public Domain, Google-digitized / http://www.hathitrust.org/access_use#pd-google
Digitized by Google
Original from
UNIVERSITY OF ILLINOIS AT
URBANA-CHAMPAIGN

pipes above the floor, even if you have to carry them overhead, and above all things be clean in every way as regards the machines, for dirt is the greatest enemy the Diesel engine has to contend with, and cleanliness is essential to successful operation.

Calculation of Stresses in Plate Girder Spans *

By C. H. MARKS

IN plate girder spans, as in all types of railway bridges, this calculation is based on the following loads: (1) dead load, (2) live load, (3) impact, (4) wind stresses, (5) centrifugal force when track is on a curve, and (6) traction. The methods, both analytical and graphical, for obtaining the dead and live load stresses are fully covered in all text-books on this subject, and universally recognized in practice. As these basic methods are unaffected by evolution in construction, it seems unnecessary to consider them here.

The dead load per lineal foot of track must be assumed to begin the calculations. It consists of the weight of material in the deck and the steel in the structure. In determining the deck, it is usual to consider first the maximum axle load plus impact, distributed over three ties. This will determine the size of ties needed, and as the rails and guards and fastenings are standard, the weight of the deck is then known. The weight of the steel must be assumed either by approximate methods or from records of weights of other spans, and when the design is completed a check should be made to make sure that these assumptions agree with final results.

The live loads adopted by various railroads are usually standard types of consolidated engines followed by a uniform train load and an alternate heavy concentrated load, and the different classes of loading are provided for by varying the loads in the same proportion throughout the whole train. In this way the calculations of stresses are simplified and the results are quite satisfactory, as it is impossible to foresee in every case the exact wheel loads which may be carried by the bridge. Moreover, by the adoption of this standard loading, tables of shears and moments for deck spans of various lengths can be made, which save time and labor in actual practice. In through bridges it is always necessary to calculate each bridge by applying the actual wheel loads.

Impact stresses should always be added to provide for the momentum of the live load caused by deflection of the bridge, the unevenness of the track, vibrations, and various other conditions, but the amount of this impact is always a stumbling block to bridge engineers, as shown by the number of different formulae in use. The intensity of this impact depends on the length of span under load, the proportion of dead and live loads, the elasticity of material and other causes which are unknown, and it is imperative that practical experiments be made on all types of bridges to determine a formula for impact which will be reasonable and satisfactory. However, all formulae used at present are doubtless on the safe side.

The wind stresses in an ordinary plate girder span do not affect the sections of the main girders at all, because they are usually not considered unless they exceed 25% of the other loads combined. In plate girder bridges a moving load of 600 lb. per lineal foot of span is ample to provide for the wind on a moving train, for the oscillation of the train, and for the wind on the bridge itself. This force will determine the wind stresses in the lateral system.

The centrifugal force of a train, when the bridge is on a curve is not so important as the preceding stresses, but it cannot be neglected and should be considered, both in the laterals and in the main members. The equation $F = \frac{W V^2 D}{85{,}700}$ gives the centrifugal force for a load W on a curvature of D degrees with a velocity of V miles per hour. It is considered to act in a horizontal direction, 5 ft. above the base of rail and at right angles to the line of bridge. All engineers agree that the force of F must be resisted

*Abstract from *Applied Science*, August 1913.

Generated on 2024-09-30 00:21 GMT / https://hdl.handle.net/2027/uiug.30112007837898
Public Domain, Google-digitized / http://www.hathitrust.org/access_use#pd-google
Digitized by Google
Original from UNIVERSITY OF ILLINOIS AT URBANA-CHAMPAIGN

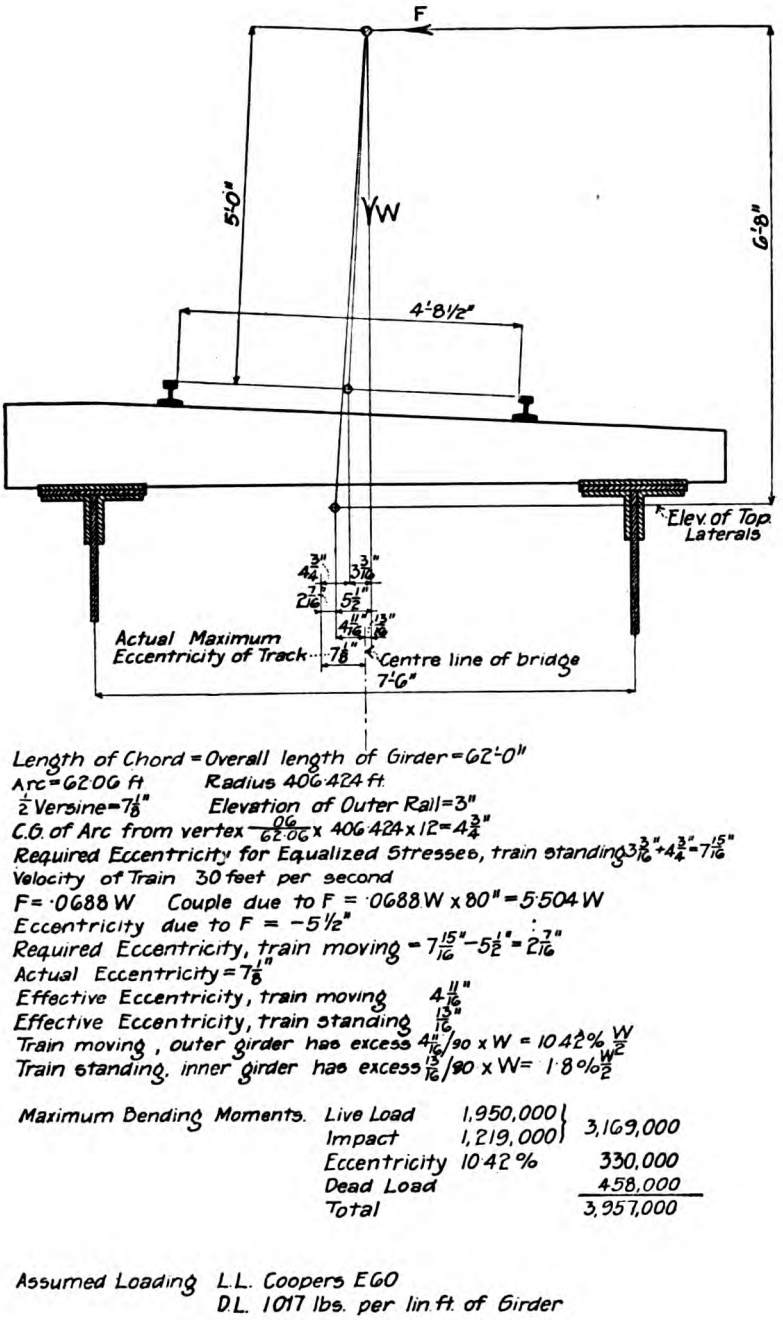

FIG. 1. DISTRIBUTION OF LOADS FOR BRIDGES ON CURVES.

by the lateral bracing in the same manner as the wind stresses, but they do not all have the same opinions of the stresses produced in the main girders. The best arrangement of a curved track on a bridge, is to place the axis of the bridge parallel to the chord of the curve, and to make the centre line of the bridge bisect the middle ordinate of the curve at the centre of the span. In other words, the deviation of the track from the

Generated on 2024-09-30 00:19 GMT / https://hdl.handle.net/2027/uiug.30112007837898
Public Domain, Google-digitized / http://www.hathitrust.org/access_use#pd-google
Digitized by Google
Original from UNIVERSITY OF ILLINOIS AT URBANA-CHAMPAIGN

centre line of the bridge is the same at the middle as at the ends of the span, and this is an advantage in the event of train derailment. Some bridge engineers are satisfied to consider that, with this position of the track, there will be practically the same load on both girders, and they only add centrifugal force stresses to the lateral system, and use the same girders for a track on a curve as for a track on a tangent.

A more general practice is to assume that there is an overturning action, and that in addition to one-half the live load, there is a load on the outer girder equal to $\frac{F\,h}{b}$ where F is the centrifugal force, h is the height at which F acts above the lateral system, and b is the spacing centre to centre of girders.

Another practice is to consider that the eccentricity of the track at the centre of the span is constant over the entire length of the bridge. Then the proportion of the live load to be added to each girder is given by the formula $W\left(\frac{M+b}{2\,b}\right)$ where W equals the live load, M is the centre ordinate to the curve, and b is the distance centre to centre of main girders. A thorough treatment of this subject is given in Fig. 1 and the data accompanying it. The theory applied in this example was advanced by Ward Baldwin, who is a practical man, and perhaps the best authority on this subject in the United States. In this example the track is superelevated to suit only a medium speed of train. On account of this arrangement, neither the vertical direct load of a stationary train, nor the direction of the resultant force of a train at high speed, pass through the centre line of track, and these conditions are all taken care of in the calculations. Mr. Baldwin also finds the centre of gravity of segment, and uses it as the effective position of the centre of the track throughout the length of the span for deck girders. He then arrives at the effective eccentricity for either a fast or slow moving train. The worst condition is used in the calculations, and both girders are made the same section. The extra load which is figured to come on one of the main girders is given as a percentage of the applied load. It is used in the stresses in connection with the live load plus the impact. The above method of determining the centrifugal force stresses, combines all the assumptions made by other engineers, and suggests new ideas which merit consideration. It was the first time, so far as I know, that it had ever been used, and it is the more interesting on that account.

The same theory applies in the calculations of the floor system and girders of through spans, with the exception that the position of the centre line of the track at the various panels is used in the calculations, and it is not necessary to assume an effective position of the track over the length of the bridge. In through bridges, too, the stringers should be made to follow the line of track as nearly as practicable.

When the track is on a spiral, the degree of curvature at the centre of the span is considered constant over the whole length of the bridge in figuring the centrifugal force.

The traction stresses are caused by the momentum of trains either starting or stopping, the amount being dependent upon the coefficient of friction between the wheels and the rails, which is usually considered 0.20. This force is not considered in connection with the main girder at all, but it does affect the lateral bracing in through plate girder spans. The best construction, to provide for this force, is to connect the bottom of the stringers to the lateral angle at the points where they cross, and to add a diaphragm between the stringers at these points, which will take the resultant of the stresses in laterals and stringers. This diaphragm will also act as a lateral support for the top flange of the stringers. The reason for the above detail is to prevent the traction from producing any horizontal bending moment in the floor beams, which, of course, it is desirable to avoid.

Generated on 2024-09-30 00:18 GMT / https://hdl.handle.net/2027/uiug.30112007837898
Public Domain, Google-digitized / http://www.hathitrust.org/access_use#pd-google
Digitized by Google
Original from UNIVERSITY OF ILLINOIS AT URBANA-CHAMPAIGN

Company Reports

Pacific Gas & Electric Co., at a special meeting on September 10, authorized an issue of 6% gold notes of a maximum amount of $7,000,000, to mature June 26, 1914, secured by pledge of collateral, consisting of $5,000,000 par value of general and refunding mortgage 5% bonds and $5,000,000 par value general lien 6% bonds, both of which issues have been authorized by the stockholders.

The *California Railroad Commission* has granted authority to the Mailliard estate to raise its rates for water service in Lagunitas and San Geronimo, Marin county, from $6 per year to sums ranging from $7.79 to $20.51 per year, depending on the number of months in which the water is used.

The *Tulare County Power Co.* has applied to the California Railroad Commission for authority to issue $250,000 in notes with maximum maturities of eighteen months. The notes are to be discounted in the amount of $50,000.

The *Tulare County Power Co.* has applied to the California Railroad Commission for permission to issue renewal notes to the amount of $50,000 to Thomas C. Job and to issue as collateral therefor $66,000 of its 6% bonds; and also to issue $4000 of its 6% bonds to secure a note of $3400 representing the interest which has accrued on the notes to be renewed.

The *California Railroad Commission* has rendered a decision permitting the Burbank Electric Light & Power Co. to sell its entire system to the city of Burbank for the sum of $3212.50.

The *California Railroad Commission* has granted the application of the H. G. Lacey Co., which operates a lighting plant at Hanford, to issue promissory notes in the aggregate of $20,000.

The Ventura County Power Co. and the city of Oxnard have joined in an application to the California Railroad Commission asking that the city of Oxnard be given authority to buy the water system known as the Oxnard Water System and owned by the Ventura County Power Co., for $30,000, and permission has been granted.

The Pacific Telephone & Telegraph Co. has applied for authority to withdraw from the territory at Farmington, California, and the Farmington Telephone Association has applied for authority to enter this territory.

The *California Railroad Commission* has rendered a supplemental order approving the plans for the proposed station building of the Atchison, Topeka & Santa Fe at Empire, California.

The *California Railroad Commission* has rendered a decision permitting the Tulare County Power Co. to issue ten promissory notes in the aggregate face value of $50,000 secured by 133 6% bonds of the par value of $66,500. The notes authorized are to replace ten similar notes now held by Thomas C. Job. The Commission denied the application of the company to pledge eight of its 6% refunding bonds of the par value of $4000 to secure $3243 interest on the notes held by Mr. Job.

The *California Railroad Commission* has rendered a decision granting authority to Ansel M. Easton to sell the Black Hawk Water Co. to the city of Burlingame, California, for $5520.

The Hihn Water Co., which operates in the city of Santa Cruz, California, has filed an application for permission to issue stock to the amount of $30,000 for the purpose of acquiring additional property for its system.

The *California Railroad Commission* has rendered a decision granting authority to Arthur W. Sloan and Frank Rosebrough to sell their water system in Nordhoff, Ventura county, California, to the Ojai Power Co. for $3000. The Ojai Power Co. is also given authority to operate a water system and to lease a water system from the Ojai Improvement Co. and to issue stock of the par value of $10,000. The Ojai Power Co. proposes by the purchase of these two water companies to go into the water business, and will want additional stock to finance, purchase, and lease these systems, and to provide for their extension.

Generated on 2024-09-30 00:22 GMT / https://hdl.handle.net/2027/uiug.30112007837898
Public Domain, Google-digitized / http://www.hathitrust.org/access_use#pd-google
Digitized by Google
Original from UNIVERSITY OF ILLINOIS AT URBANA-CHAMPAIGN

Engineers' Note Book

A Rational Formula for Asphalt Street Surfaces*

By J. ALDEN GRIFFIN

Every now and then the question is raised, "What is the proper crown to give an asphalt street?" and there is a discussion as to which of the many formulas of today gives the best results.

Having been asked this question many times in the past few years, and especially while connected with municipal improvements in Los Angeles, California, I have given the matter careful investigation, and by a comparison of the surfaces proposed by the various formulas have arrived at the conclusion that the crown rise should vary with the cross-fall as well as the grade

*Abstract from *Proceedings*, American Society of Civil Engineers, August 1913.

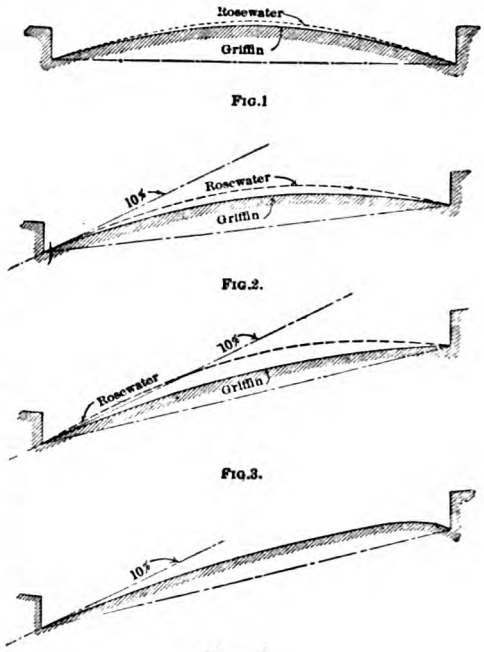

FIG. 4.

Width of roadway, in feet.	Percentage of grade on street.	Crown, with no cross-fall.	Crown Rise, for Variable Cross-Falls, in Feet.											
			0.25	0.50	0.75	1.00	1.25	1.50	1.75	2.00	2 25	2.50	2.75	3.00
28	1	0.48	0.45	0.42	0.39	0.36	0.33	0.30						
28	2	0.45	0.42	0.39	0.36	0.33	0.30	0.27						
28	3	0.43	0.40	0.37	0.34	0.31	0.28	0.25						
28	4	0.41	0.38	0.35	0.32	0.29	0.26	0.23						
28	5	0.39	0.36	0.33	0.30	0.27	0.24	0.21						
34	1	0.59	0.56	0.53	0.50	0.47	0.44	0.41	0.38					
34	2	0.57	0.54	0.51	0.48	0.45	0.42	0.39	0.36					
34	3	0.54	0.51	0.48	0.45	0.42	0.39	0.36	0.33					
34	4	0.51	0.48	0.45	0.42	0.39	0.36	0.33	0.30					
34	5	0.48	0.45	0.42	0.39	0.36	0.33	0.30	0.27					
40	1	0.71	0.68	0.65	0.62	0.59	0.56	0.53	0.50	0.47				
40	2	0.68	0.65	0.62	0.59	0.56	0.53	0.50	0.47	0.44				
40	3	0.64	0.61	0.58	0.55	0.52	0.49	0.46	0.43	0.40				
40	4	0.61	0.58	0.55	0.52	0.49	0.46	0.43	0.40	0.37				
40	5	0.58	0.55	0.52	0.49	0.46	0.43	0.40	0 37	0 34				
46	1	0.82	0.79	0.76	0.73	0.70	0.67	0.64	0.61	0.58	0.55			
46	2	0.79	0.76	0.73	0.70	0.67	0.64	0.61	0.58	0.55	0.52			
46	3	0.75	0.72	0.69	0.66	0.63	0.60	0.57	0.54	0.51	0.48			
46	4	0.71	0.68	0.65	0.62	0.59	0.56	0.53	0.50	0 47	0.44			
46	5	0.68	0.65	0.62	0.59	0.56	0.53	0.50	0.47	0.44	0 41			
56	1	1.01	0.98	0.95	0.92	0.89	0.86	0.83	0.80	0.77	0.74	0.71		
56	2	0.97	0.94	0.91	0.88	0.85	0.82	0.79	0.76	0.73	0.70	0.67		
56	3	0.93	0.90	0.87	0.84	0.81	0.78	0.75	0.72	0.69	0.66	0.63		
56	4	0.88	0.85	0.82	0.79	0.76	0.73	0.70	0.67	0.64	0.61	0.58		
56	5	0.84	0.81	0.78	0.75	0.72	0.69	0.66	0.63	0.60	0.57	0.54		
62	1	1.13	1.10	1.07	1.04	1.01	0.98	0.95	0.92	0.89	0.86	0.83	0.80	
62	2	1.08	1.05	1.02	0.99	0.96	0.93	0.90	0.87	0.84	0.81	0.78	0.75	
62	3	1.03	1.00	0.97	0.94	0.91	0.88	0.85	0.82	0.79	0.76	0.73	0.70	
62	4	0.98	0.95	0.92	0.89	0.86	0.83	0.80	0.77	0.74	0.71	0.68	0.65	
62	5	0.93	0.90	0.87	0.84	0.81	0.78	0.75	0.72	0 69	0.66	0.63	0.60	
72	1	1.32	1.29	1.26	1.23	1.20	1.17	1.14	1.11	1.08	1.05	1.02	0.99	0.96
72	2	1.27	1.24	1.21	1.18	1.15	1.12	1.09	1.06	1.03	1.00	0.97	0.94	0.91
72	3	1.21	1.18	1.15	1.12	1.09	1.06	1.03	1.00	0.97	0.94	0.91	0.88	0.85
72	4	1.15	1.12	1.09	1.06	1.03	1.00	0.97	0.94	0.91	0.88	0.85	0.82	0.79
72	5	1.09	1.06	1.03	1.00	0.97	0.94	0.91	0.88	0.85	0.82	0.79	0.76	0.73

Generated on 2024-09-30 00:24 GMT / https://hdl.handle.net/2027/uiug.30112007837898
Public Domain, Google-digitized / http://www.hathitrust.org/access_use#pd-google
Digitized by Google
Original from UNIVERSITY OF ILLINOIS AT URBANA-CHAMPAIGN

of the roadway, and that a crown considerably lower than that proposed by the well known formula of the late Andrew Rosewater should be used on streets having a cross-fall between the gutter grades. I even favor one which is slightly lower, where there is no cross-fall in the roadway; and, having reached these conclusions, I proceeded to determine the proper amount of reduction to make in the crown for varying cross-falls.

After making a great many experiments I adopted the following modification of Mr. Rosewater's formula. This gives the best results, using one-eighth of the cross-fall plus ¾ in. as the reduction factor, but some may wish to change $0.12H$ in the formula to $0.10H$, or even $0.08H$, in order not to reduce the crown quite so much; however, the following is recommended:

$$C = \frac{W\,(100 - 4\,p)}{5000} - (0.12H + 0.06)$$

in which W = the width of the roadway between curbs, in feet; p = the percentage of grade longitudinally on the street; H = the cross-fall of the street, or the difference of elevation between the high and low gutters, in feet; and C = the height of the crown above the mean gutter grade, in feet.

It will be noticed that on a roadway having a very steep cross-fall, the upper gutter will not hold water, which, in the majority of such extreme cases, will do no harm, and will very often save a cross-gutter at the intersection; however, it may be desired at some time to hold the water in the upper gutter, and this may be accomplished, without increasing the side slope of the surface, by shifting the crown to the upper side of the centre of the roadway as shown in Fig. 4, which indicates a special cross-section at that point. Table 1 is compiled from the formula for the more common roadway widths in Los Angeles. Fig. 1 to 4 illustrate the comparison between Mr. Rosewater's formula and the modification herein proposed on a 40-ft. roadway having a 1% grade. Fig. 1 is for no cross-fall; Fig. 2 for a cross-fall of 1 ft. between the mean gutters; and Fig. 3 is an extreme case with a cross-fall of 2 ft. between the mean gutters. Fig. 4 illustrates a section in which the lower half meets the formula and the upper half is modified to hold the water in the upper gutter.

Hints on Practice

Keys and How to Remove Them

By GEORGE RICE

A man tried to remove a steel key from a crankpin and shaft by striking the arm with a hammer. He had previously tried to remove the key by the common method of driving it back, but had failed. He had also poured oil on the parts and tried other means to free the obstinate key. Then he lost his temper. It does not do to get impatient with keys, as they are pretty sure to hold tightly when driven correctly, for that is what is expected of them. Nevertheless, this man sought to remove the key by banging at the parts with the hammer, but he had not delivered many blows when the cast iron arm broke.

Another man used the sharp edge of a cold-chisel on the part of the key extending beyond the hub. Consequently the edge of the cold-chisel was sunk well into the steel, and the key was ruined when it was finally removed.

A common method of freeing refractory keys is to drive them through with a like key from the other side. This method is often used, and is a good way of driving out stubborn keys when it is possible to get at the sides of the work. It will, however, be necessary to use a driving key of smaller dimensions than the keyseat; otherwise the driving key will bind so tightly in the seat that there will be trouble in getting it free.

Among the numerous types of keys in use is the halfmoon-shaped key that covers about one-half of the shaft. This key, when once set, is quite hard to remove. Then there is the key made to fit on a flat section of the shaft, also the bothersome form of key that is calculated to bind so tightly in the seat of the hub that the frictional contact with the shaft will cause the hub to hold firmly in place.

Still other forms are the round key, the extended oval key, and the diamond-shaped key. If the key has a head, the chances are that it can be pried from its seat with a cold-chisel. If it has no head, and cannot otherwise be removed, drill it out by drilling

Generated on 2024-09-30 00:21 GMT / https://hdl.handle.net/2027/uiug.30112007837898
Public Domain, Google-digitized / http://www.hathitrust.org/access_use#pd-google
Digitized by Google
Original from UNIVERSITY OF ILLINOIS AT URBANA-CHAMPAIGN

the corner holes. Instead of drilling holes at the corners of the key, holes are sometimes made along the upper side of the key. The key is then easily removed.—*Power.*

Bending Cast Iron Pipes

Through somebody's oversight no bends or sleeves were ordered for a line of cast iron pipe which the United Fruit Co. had decided to lay to convey water from the Guayabo river to the town of Preston, Cuba. The canyon through which the pipe passes for a distance of about two miles from the dam is crooked, making impossible such easy curves as could be made in the pipe joints. As it might have taken several months to secure additional specials, the local engineer —not a waterworks man—decided to bend some of the straight cast iron pipe. How this seemingly impossible feat was accomplished is described in a paper read before the New England Waterworks Association.

The Cuban workers had frequently bent steel or wrought iron pipes at their sugar mills, and they followed the same course of procedure with the cast iron pipe, with entire success, as they did not break or spoil a single pipe. The pipes were bent to various radii, the shortest being 50 feet.

A cradle of old rails was first constructed with the desired amount of curvature. About one foot at each end of the pipe was left outside the fire, to prevent collapse of the pipe, and a fire of hardwood was built under and around the remainder of the pipes. Six or eight pipes were bent at a time. In one and one-half to two hours after starting the fires the pipes were hot enough to bend, and settled from their own weight to the cradle prepared to receive them.

These particular pipes were 10 in. diam., with 9/16 in. thickness of shell, corresponding to class D of the New England Waterworks Association specifications, and the weight of which is 760 lb. per 12 ft. length.—*Mechanical World.*

A REVISED Admiralty specification for oil fuel (1910) has just been issued, together with the specification for 1912, and a comparison of the two shows that certain modifications have been made in the later one with regard to flash-point, sulphur, acidity, and viscocity. The new specification provides that the flash-point shall not be lower than 175°F. close test, as compared with 200° in that of 1910. Whereas the former specification stated that the oil should be free from acidity, the later one lays down that it shall be as free as possible from acid, and that in any case the quantity of acid must not exeed 0.05%. A new condition in the later specification is that the viscosity of the oil supplied shall not exceed 2000 seconds for an overflow of 50 cu. cm. at a temperature of 32° Fahrenheit.

THE following is a coating for belts which are to be cemented at the joints: Take a good glue, add American isinglass equal parts by weight; place the material in a glue pot and add sufficient water to cover the whole. Let the mixture soak ten hours, then bring the whole to a boiling heat, and add pure tannin until the whole appears like the white of an egg. Apply warm. Buff the grain of the leather where it is to be cemented, rub the joint surfaces solidly together, let it dry for a few hours, and the belt will be ready for use. Tannin or tannic acid is an astringent substance used in converting hides into leather, and produces a surface on a cemented belt similar to the original leather.

Book Reviews

RIVER DISCHARGE.* (Second Edition.) By John C. Hoyt and Nathan C. Grover. P. 173. Index. John Wiley & Sons, New York. For sale by the *Mining and Scientific Press*, San Francisco. Price, $2.

There are few if any men better equipped than are the authors, both by long training and wide experience, to write upon such a subject as river discharge. This work is extremely valuable to all who are engaged in the study, exploitation, and development of water resources. With the exception of U. S. G. S. Water-Supply Papers No. 56 and 94, 'River Discharge' is the only work known to me which is devoted exclusively to this field and which is generally available. The manner of presentation of prin-

*Reviewed by Charles Gilman Hyde, professor of sanitary engineering, University of California.

Generated on 2024-09-30 00:22 GMT / https://hdl.handle.net/2027/uiug.30112007837898
Public Domain, Google-digitized / http://www.hathitrust.org/access_use#pd-google
Digitized by Google
Original from UNIVERSITY OF ILLINOIS AT URBANA-CHAMPAIGN

ciples and of facts and the general scope of the book make it equally serviceable as a text and for reference. It is sufficiently comprehensive to permit an engineer to become thoroughly acquainted with the theory and practice of stream measurements and the fundamental principles and conditions affecting run-off.

The chapter on instruments and equipment considers the use of floats, current meters, sounding appliances, and gauges of all types. The treatment of the current meter is unusually satisfactory. The Price meter, which in its various forms has been adopted as standard apparatus in all stream measurement work conducted by the U. S. Geological Survey, is discussed in great detail. A thorough explanation of the proper care of the current meter represents a particularly helpful feature of this chapter. Other interesting features are the description of methods of rating current meters and a chart showing typical rating curves for all well known types. This chart exhibits the relative sensitiveness to low velocities of these several current meters.

The chapter on velocity-area stations treats of current meter (bridge, cable, boat, and wading), float and slope stations. The various considerations which should determine the selection of a velocity-area station are effectively outlined. The methods of determining the area of cross-section, the laws governing velocities, the methods of using the current meter and floats in stream-measurement work, and the determination of flow by the use of slope formulae, all receive adequate attention. The chapter contains a review of certain particular problems introduced by conditions of low water and high water and by ice covering, and considers the proper application of methods of measurement to artificial channels.

One chapter of the book is devoted to weir stations in which the several available types of weirs are discussed and formulae are presented for the calculation of discharge. An appendix contains several tables prepared with a view to make weir calculations comparatively simple, accurate, and rapid.

Another chapter entitled 'Discussion and Use of Data' is comprehensive. It treats of the principles affecting and the methods of construction of area curves, mean velocity curves, station-rating curves, and discharge tables, both for streams with permanent and with changing beds, and for ice-covered channels. The treatment of methods of determination of discharge of streams at stations with changing beds is interesting, as are also the methods shown for forecasting the rating curves to high stages from data applying directly only to low stages (page 99). The chapter ends with an extremely useful discussion of the principles and methods of logarithmic plotting.

The last chapter, dealing with conditions affecting stream flow, is notably suggestive to the student and to others who have never given attention to the various factors governing run-off. In addition to the weir tables referred to above, an appendix to the book contains a series of useful conversion tables and a table of coefficients for use in the general Chezy formula.

Discussion

A Logical Highway Tax

The Editor:

Sir—In these days of widespread agitation of the subject of good roads, of earnest discussion of ways and means for highway improvement, and of county, state, and national highway bond issues, the problem of financing these huge enterprises and of justly distributing the burden of payment as between different classes of the community and between the present generation and those to come, is one to engage the attention of thoughtful and far-seeing men.

Among the many proposals for the raising of funds for highway building and maintenance, it is remarkable that none has so far appeared for taxing the owners of various vehicles in proportion to the wear and tear to which each subjects the roadbed. The land-owners of many rural communities seriously object to assessments on real estate for the building of road surfaces which are rapidly raveled out by the suction exerted on all the loose particles by swiftly driven automobiles, and there is much reason in their contention; but many of the same men will not hesitate to load a heavy, narrow-tired wagon with from two to four tons and inflict more serious damage to a road surface than that caused by the passage of hundreds of automobiles. The owners of motor-truck lines do not limit

Generated on 2024-09-30 00:19 GMT / https://hdl.handle.net/2027/uiug.30112007837898
Public Domain, Google-digitized / http://www.hathitrust.org/access_use#pd-google
Digitized by Google
Original from UNIVERSITY OF ILLINOIS AT URBANA-CHAMPAIGN

their loads as a result of any consideration of the permanence of the highway, and the driver of a traction engine inquires only whether the bridges and culverts will hold up until he can get across.

Various state legislatures, at the instance of good roads enthusiasts, have passed laws forbidding the use of tires of less than 3, 4, or 5 inches in width on wagons fitted to carry loads exceeding certain specified weights. These laws seem to be difficult to enforce, and for that reason have now become practically obsolete. The builders of some expensive boulevards in the Northwest have attempted to save their beautiful road surfaces from rapid destruction by motor-trucks by limiting the size and weight of load of these vehicles. Such legislation is, however, deplored by many, as being an attempt to limit the scope of an industry of undoubted public benefit. We are just beginning to realize that the building of a modern highway is only a portion of the activity necessary for the possession of a good road; that a road without maintenance care is like an automobile without oil—certain to deteriorate so rapidly as to make the original investment a folly. It is also the fact that a smooth and even roadbed is much more essential to some forms of traffic than to others. The man on foot journeys most easily on a pathway worn through the grass; a bridle trail would serve the purposes of the traveler on horseback; while a macadam road in indifferent repair is not especially unfavorable to a light horse-drawn vehicle. The automobile, on the other hand, insistently demands a surface in the nature of a pavement; while the use of motor-trucks is practically confined to the regions of improved streets and highways.

Would it not be logical, effective, and just to tax all vehicles on a graduated scale, rising from an almost nominal sum in the case of light horse-drawn vehicles through heavy, broad-tired, horse-drawn wagons, automobiles (in proportion to horse-power), motor-trucks (in proportion to horse-power and load capacity), and reach an upper limit in the cases of traction engines and heavy *narrow-tired* wagons? It would be a simple matter to make the annual tax on any type of vehicle which was found especially destructive so heavy as practically to prohibit its use; and this form of prohibition is one that would not depend upon prosecutions for its enforcement. The taxing power would thus serve not only for the raising of money, but for the regulation of traffic with a view to securing the best results from its expenditure.

TRACTOR TRAFFIC ON COUNTRY ROADS.

Generated on 2024-09-30 00:18 GMT / https://hdl.handle.net/2027/uiug.30112007837898
Public Domain, Google-digitized / http://www.hathitrust.org/access_use#pd-google
Digitized by Google
Original from UNIVERSITY OF ILLINOIS AT URBANA-CHAMPAIGN

Another incidental advantage, which might prove of great importance in the long run, would be the fact that the most active users of the roadways would be those who contributed most largely to their construction and maintenance. Automobile and motor-truck owners would feel a very direct interest in the streets and highways, and this interest would take account of something more than the surface. They would demand, and probably secure, scientific and permanent road building in place of that governed by tradition or by the exigencies of local politics. Permanent foundations and expensive surfaces would be laid only when permanent lines and grades had been established; protected steel or reinforced concrete would take the place of wood for bridges, and reinforced concrete or high-purity corrugated iron would replace temporary culvert materials. There is no doubt that the education of the public in general is progressing along these lines; but the active attention of those so directly concerned would probably prove more immediately effective.

Part of the benefits of improved highways are of a general character, and a portion of the expense should always be borne by general taxation. It cannot be disputed, however, that the owners of vehicles are more directly benefited than others. This form of tax is one which could be readily and surely collected, and one which would appeal to the general spirit of fair play.

B. G. MARSHALL.

Berkeley, September 18.

Concrete Roads

The Editor:

Sir—Hydraulic cement concrete as a paving material is receiving considerable attention at the present time both in the technical and quasi-technical press. Its durability and cleanliness have been proclaimed from the housetops, and its cheapness is a by-word all over the land. I have never been an enthusiastic admirer of cement concrete as a paving material, having always found that in spite of the greatest care in the make-up of specifications, selection of materials, and rigidity of inspection, an ordinary cement sidewalk laid under every-day contract conditions is extremely hard to obtain without flaws more or less obvious. One has but to walk along one of our city streets to observe cement concrete and its behavior when subjected only to the traffic of pedestrians. How many blocks are there without a crack, a hole, or a buckle of some kind? And how inartistic the attempted patches look.

JUNCTION OF TRANSVERSE AND LONGITUDINAL CRACKS.

These deplorable conditions can be viewed all over the country, and, wherever the work is honest throughout, are caused by the same

Generated on 2024-09-30 00:27 GMT / https://hdl.handle.net/2027/uiug.30112007837898
Public Domain, Google-digitized / http://www.hathitrust.org/access_use#pd-google
Digitized by Google
Original from UNIVERSITY OF ILLINOIS AT URBANA-CHAMPAIGN

old natural force, the heat of the sun and its variations at different times of the day and year. It has been claimed that cement concrete is especially adapted as a road-paving material to the California climate, and that a coat of bitumen with some stone screenings would protect it from the extreme action of the sun's rays. I have never been able to see the logic of this reasoning, as the bitumen is black and naturally absorbs more of the sun's rays than the bare concrete surface, which is grayish white. Therefore, it would seem that the heat action on bitumen-covered concrete would be more severe than on uncovered concrete.

LONGITUDINAL CRACK; EDGES BREAKING.

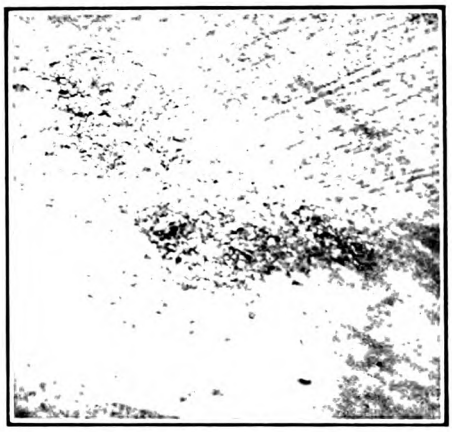

SPREAD OF BREAKING DOWN PROCESS.

The idea of the coat of bitumen and screenings must be that it is expected to keep viscous enough to penetrate into all cracks formed and thus cover them up, that they may not be discovered by the lay observer.

I recently had occasion, in connection with other business, to pass over the concrete roadway which runs south from Healdsburg to Santa Rosa and is laid and traveled over as far as Windsor, a small railroad station about five miles south of Healdsburg. This road is part of the state highway being constructed under the supervision of the State Highway Commission, and has been in place for several months. At present writing, August 1913, it is still without the paintcoat of bitumen and would naturally give an idea of how cement concrete would behave under similar conditions elsewhere. As stated above, the traveled portions of this concrete roadway end at the branch road to Windsor station. At this point the road south is closed by order of the Highway Commission on account of grading being under way. The extravagant claims made that this is the horseless age and that our farmers all own automobiles is certainly not borne out by the traffic over this road. Most of the traffic is steel-tired and consists of buggies, delivery wagons, and heavy two-horse wagons drawing large loads of boxed fruits to the markets or canneries, and the automobiles were so few and far between that the proportion was as ten to one in favor of the steel-tired rigs, which is far from being favorable to a cement-concrete roadway.

I found the concrete roadway as I expected—one monotonous succession of cracks, the variations being offered by the incipient chuckholes which are in a *status nascendi* at the present, but very promising. The majority of the cracks, transverse, of course, intersect the roadway at distances apart that vary from 15 to 30 ft., but in some places they are only 8 ft. apart. They are very irregular, as can be seen from the photographs, taken at the time of the visit, and cut through the concrete clear down to the subgrade, affording excellent openings for the rainwater, and what a water-soaked subgrade will do to the concrete may readily be surmised. The edges of the cracks are already considerably worn by the traffic, and the ensuing detritus is helping to further grind and break down the road.

Longitudinal cracks are also appearing, running along the crown of the roadway for considerable distances, being thus sub-

Generated on 2024-09-30 00:19 GMT / https://hdl.handle.net/2027/uiug.30112007837898
Public Domain, Google-digitized / http://www.hathitrust.org/access_use#pd-google
Digitized by Google
Original from UNIVERSITY OF ILLINOIS AT URBANA-CHAMPAIGN

ject to a severe and continued grinding process. In the places where the transverse cracks are close together, longitudinal cracks are appearing on both sides of the centre, giving the roadway a decidedly checkered appearance. The concrete adjoining the transverse cracks is seemingly higher than the centre portions of the slabs, giving the aspect of being raised from the subgrade. That this must be so is further accentuated by the fact that when vehicles pass over these cracks the sound is hollow, as on a bridge, and it certainly does not bode well for the future usefulness of this kind of a roadway. The most vulnerable points of the concrete are the intersecting points between the transverse cracks and the longitudinal cracks will prove to be, in fact are already proving themselves as such. Veritable chuckholes are already under formation here, as one of the photographs will show.

Repairs will evidently not confine themselves to the paintcoat, and skin repairs to concrete have not been successfully made so far. The portion of the roadway close to Windsor is not up to specifications in thickness; it is only 2¼ in. thick in some places, and a big stretch of this has been torn up by the Commission. The aggregate used in this work is a gravel consisting of round water-worn pebbles, and samples taken of the concrete show a high percentage of cement, but in spite of this a very poor bond is obtained which can only be due to the extremely dry conditions under which this concrete has been laid, all conducive to a lifeless and brittle concrete that will not be able to withstand the traffic conditions imposed on it.

The whole aspect of this piece of road does not show a single trait that would warrant the conclusion that hydraulic cement concrete is a proper paving material for roadways, and we shall yet see a return to the water bound macadam as a first aid to country roads when the cement-concrete road fad has ceased.

An idea prevailing in many quarters is that the traffic of the future will be largely rubber-tired, but a few observations and a little thought will soon show how fallacious this idea is. The building of tractors, the use of which is increasing every day, both steam and gasoline, capable of working on all sorts of ground, shows just what sort of traffic our roads will have to stand, and any test of strength made by running a smooth, wide-tired steam roller over a portion of concrete roadway does not show the road's capacity to withstand the pounding effect of the tractors on a long stretch of the road-surface which is far from smooth and even in itself. Another factor in the early destruction of these roads will be the soil upon which they are built; for whether this is dry and clayey and forming a deep layer of dust in the summer, or of any adobe mixture, it will when the rains set in become saturated, swell and break the concrete, which is too thin and otherwise in no condition to withstand this strain.

GEORGE NELSON.

San Francisco, August 30.

Industrial Progress

A Filter Installation

By C. F. BRAUN

In July the famous Bohemian Grove on the Russian river opened for the annual vacation and 'jinks' of the Bohemian Club members. It immediately became apparent that the unusually dry season had so depleted the spring supplying water for the camp, that there would be an entirely insufficient supply.

As members were arriving rapidly, prompt action of some kind was imperative; and it was finally decided to pump from the Russian river, a distance of about one mile. But the flow of this river in summer is very sluggish, particularly so this year, and it is continually filled with swimmers from the many summer resorts on its banks.

For these reasons the river water was considered by doctors to be unsafe for drinking purposes, and it, therefore, became necessary to provide some sort of purifying apparatus. The matter was accordingly taken up with water purifying engineers to ascertain if some temporary sterilizing or filtering apparatus could be immediately installed. Builders of the apparatus agreed to construct permanent apparatus within ten days, and on July 22 they were given instructions to proceed, and work was commenced immediately.

The apparatus consists of a rapid gravity sand filter 8 ft. diameter and 7 ft. high, having a rated capacity of 100 gal. per

Generated on 2024-09-30 00:20 GMT / https://hdl.handle.net/2027/uiug.30112007837898
Public Domain, Google-digitized / http://www.hathitrust.org/access_use#pd-google
Digitized by Google
Original from UNIVERSITY OF ILLINOIS AT URBANA-CHAMPAIGN

minute. The filter was constructed entirely of local stock materials, the special silicate filtering sand necessary being obtained from Monterey bay. The filter, without the use of sterilizing chemicals, removes all impurities and color visible to the eye and accomplishes a bacteria reduction of 97 to 99 per cent.

In order to render the water absolutely sterile and safe, a small quantity of hypochloride of lime is added, which with certainty destroys any B coli (a group of bacteria including the baccili of typhoid, dysentery, and other dangerous stomach and bowel troubles) which might still remain in the water.

The quantity of hypochloride required (10 lb. per 1,000,000 gal. of water) is so small that its presence in the water is not perceptible to taste or smell. The feeding of the small quantity of hypochloride necessary is accomplished by dissolving it as a very weak solution. This solution is stored in barrels, whence it flows into a small feed tank in which the level is maintained constant by means of a float valve. The chemical is fed by means of a small adjustable orifice in the bottom of this constant head tank.

The apparatus was completed and put in operation on July 31, just nine days after the work was commenced, and supplied ample sterile water for the twenty-five hundred members and help who attended the 'jinks' on August 2.

WATER PURIFICATION PLANT.

The apparatus, which is permanent, was installed at a cost of less than $500. C. F. Braun & Co. were designers and constructors.

Obituary

Francis Valentine Toldervy Lee was born at Winchester, New Hampshire, England, August 20, 1870, and died at Victoria, British Columbia, Canada, August 17, 1913. He was a son of Francis V. T. Lee of Shropshire, England, an officer of the Queens Own Light Infantry. His school and college training was obtained at Manchester grammar school, Manchester, England; College Communal, Boulogne, s.m., France; and Leland Stanford Jr. University, California, where he was graduated in 1897 taking the degree of B.A. in electrical engineering, and was also assistant to Dr. F. A. C. Perrine, professor of electrical engineering, 1893 to 1897.

Mr. Lee came to Sherbrooke, Canada, in 1887, and for the greater part of three years was in the service of the Canadian Pacific railroad as private secretary to the division superintendent. He resigned from railroad service to supplement with a more adequate technical training in this country that part of his school training that was taken abroad. Shortly after his resignation he went to Victoria, British Columbia, and thence home to England on a trip, after which he returned to New York, where he entered the Manhattan Electric Co. in order to gain experience that would enable him to test his liking for electrical engineering. Here he came in contact with the late Dr. F. A. C. Perrine, and there resulted one of the great friendships of his life. Often a preceptor exercises a very great influence on the life and personality of a student, particularly is this true when they come as intimately in contact as did Dr. Perrine and Mr. Lee, who then was working his way through college, and assisted Dr. Perrine as secretary and general laboratory assistant. So strong was Dr. Perrine's influence that many of Mr. Lee's old friends have often remarked on the little personal mannerisms, if they may be so called, that each acquired, unconsciously, doubtless, from the other.

Shortly after being graduated from the university he was appointed assistant engi-

Generated on 2024-09-30 00:23 GMT / https://hdl.handle.net/2027/uiug.30112007837898
Public Domain, Google-digitized / http://www.hathitrust.org/access_use#pd-google
Digitized by Google
Original from UNIVERSITY OF ILLINOIS AT URBANA-CHAMPAIGN

neer to John Martin, agent for the Pacific coast department of the Stanley Electric Mfg. Co. He rose rapidly in this service, being appointed engineer, January 1898, manager of the office in June 1899, and a year later was made vice-president and general manager of John Martin & Co., electrical engineers and contractors, also district Pacific coast manager for the Stanley Electric Mfg. Co., and many other Eastern manufacturers. During the above period there came under his direct supervision the erection of many of the earlier lighting and power plants that later were absorbed by the Bay Counties Power Co. and the Pacific Electric Railway Co., for example.

Early in 1906 he severed his connection with John Martin & Co., but followed Mr. Martin's interests into the Pacific Gas & Electric Co. where he was made assistant to the president. As such he was generally responsible for the construction and operation of the hydro-electric developments of that company.

About three years ago he resigned from the service of the Pacific Gas & Electric Co. to rest and to enjoy his well-earned competence. His last three years were play years, enjoyed fully in the close companionship of his wife and two daughters, with whom he spent these years abroad, in his old home in England, and traveling on the Continent. They returned a few months ago to Victoria, where he had intended to make his future residence.

On September 27, 1899, he was married to Edith K. Bonnallie, of Sherbrooke, Quebec, Canada, who, with his two daughters, Ruth and Margaret, survives him. Mr. Lee died before much of his work, particularly that of the last seven years, had time to demonstrate its real worth. In all his business life his relations with the really big men with whom he worked, brought a mutual confidence and personal regard that in many cases amounted to a real affection. For the others, those of less calibre, he had a good-humored tolerance, although at times his path was made exceedingly rough. His absolute faith in the kindliness of human nature was wonderful, for he had many rebuffs, but they never embittered him, and by habit he refused to believe any harm or evil of anyone until he had absolute proof of it. Many times he was heard to say "'They say' is a liar," and this he lived up to. Those who came intimately in contact with him knew the absolute integrity, the uprightness, and the sweet disposition of him, and are thankful for the memory of him they cherish, and for the last three years he enjoyed so much.

His personal tastes were simple. The fine arts, of which he had a cultured enjoyment, appealed to him strongly. His reading covered a wide range, and having leisure he enjoyed his fine reference library to the full. A list of the works therein is an index of his versatility, and is a revelation even to his intimates. At the time of his death he was a member of the American Society of Mechanical Engineers, the Institution of Electrical Engineers, the American Institute of Electrical Engineers, the American Gas Institute, the American Society of Civil Engineers, and the American Electro-Chemical Society. Also he was a member of Occidental Lodge, F. & A. M., of California Chapter, R. A. M., and a Knight Templar, member of Golden Gate Commandery, K. T., all of San Francisco.

ALLEN H. BABCOCK.

Engineering News

Petroleum

San Francisco, Cal.—The California Petroleum Corporation has been advised by Ralph Arnold, consulting geologist, that an expenditure of not less than $850,000 per year should be made for several years for drilling new wells and other development work. ——The daily oil production for California during the month of August was 8,411,704 bbl., a daily average of 271,345. This shows a daily average increase of 12,398 bbl. Detailed figures of production and shipment are not yet available.

Bakersfield, Cal.—The Standard Oil Co. is installing a compressor plant at Newhall for the manufacture of gasoline from casing-head gas.——Approximately 6000 gal. of gasoline per day is being turned out by the Pacific Gasoline Co. and the Brea Gasoline Co., both of which are under the management of W. J. Wallace. The former company has installed a gasoline extraction plant on the Birch Oil Co.'s property and the latter has installed a plant on the property of the Brea Canyon Oil Co. The latter plant includes three units, two

Generated on 2024-09-30 00:23 GMT / https://hdl.handle.net/2027/uiug.30112007837898
Public Domain, Google-digitized / http://www.hathitrust.org/access_use#pd-google
Digitized by Google
Original from UNIVERSITY OF ILLINOIS AT URBANA-CHAMPAIGN

250-hp. compressors and one 80-hp. compressor. The combined capacity is 1,500,000 cu. ft. of natural gas per day, from which plants for this purpose are in course of construction.——The General Petroleum Co. is preparing to construct a new pipe-line paralleling the company's existing line from Shale to Lebec, a distance of about 50 miles. The company's existing line from Shale to Lebec, a distance of approximately 50 miles. The line will be 8 in. diam. and it is expected that it will be completed within two months of the time that construction work is commenced.——The American Gas Co. has consummated a contract with the Rancho La Brea Oil Co., in the Salt Lake field, whereby the former acquires the right to utilize the entire output of natural gas from the latter's wells for extraction of gasoline. A plant is to be built with a daily capacity of 4,000,000 cu. ft. of natural gas, from which an extraction of 3000 gal. of gasoline per day is expected. The process to be used is a combination of compression, expansion, and refrigeration. W. R. Rowland, T. W. Okey, and others of the Puente Oil Co. are the controlling interest in the American Gas Co.——The Midway Gas Co. is constructing at Taft, California, a gas-compressing plant at a cost of about $750,000. The plant is being built for the purpose of adding sufficient pressure to the natural pressure obtained from the gas wells to carry natural gas through the Midway company's pipe-line to Los Angeles and through the city mains for distribution to consumers. The plant will be operated by four Cooper natural-gas engines of 1000 hp. each. The plant includes in addition a large number of auxiliaries, including a 15-ton hand and power crane, electric lighting plant, a machine-shop, a number of centrifugal pumps, and a concrete mixer which will be used in preparing concrete for the construction of the concrete reservoirs for cooling purposes. Drilling for water for furnishing a supply for cooling purposes is already under way. G. W. Schnell is in charge of construction in the field, and George W. Barnes is general manager for the company.

Coalinga, Cal.—A 35,000-bbl. storage tank belonging to the Associated Oil Co. has burned down.——The Kern Trading & Oil Co. has installed a gas-compressor near Kern for supplying gas under pressure for operation of natural-gas engines for pumping wells.

Streets and Roads

Huntington Beach, Cal.—The Board of Trade has recommended to the voters a bond issue of $22,000 to macadamize 17th street to Main street to connect with the Orange county boulevard system.

Imperial, Cal.—The Board of Supervisors of Imperial county has decided to hold an election for the purpose of issuing bonds to the amount of $500,000 to build a series of county highways between Rockwood and Calexico in one direction and between Holtville and El Centro in another. Approximately 34 miles are included in the project.

Riverside, Cal.—The Board of Supervisors of Orange county has let a contract to Withers & Crites, of Los Angeles, for paving 2½ miles of road between Orange and Oliver at a price of $12,079.87.

Willows, Cal.—The following contracts for road and bridge construction have been let: The Briscoe Creek retaining wall will be built by Gay & Teal for $300; the Ross Construction Co. will build the P. R. Garnett bridge, price $1473; F. W. Troxel was given the contract for sections 1 and 2 of the Elk Creek-Fruto road, at $1.95 per yard for section 1, and $2.75 for section 2; Covington & Robings were given a road contract in road district No. 3 for $560.

Napa, Cal.—The people have voted $10,963 for constructing roads in the Carneros road district.——J. B. Newman offered to construct a new stone bridge in Brown's valley for $3195. The matter has been taken under advisement.

Suisun, Cal.—Contract has been awarded for a macadamized road between Vacaville and Elmira at a cost of $8900.

Chico, Cal.—15,000 tons of pressed rock and gravel are being spread over the Dayton and Shasta road. R. P. Holmes is district supervisor.

Weaverville, Cal.—According to B. H. Burrell, highway engineer of public roads, U. S. Department of Agriculture, the federal government has appropriated $50,000 for road construction down Trinity river between North Fork and South Fork, a distance of 40 miles.

Ogden, Utah.—Contract has been awarded by the city commissioners to J. T. O'Neil Construction Co. for paving 25th street between Washington and Harrison avenues, a distance of 8 blocks, at a price of $50,152.79. J. P. Moran Co. bid $51,017.49, and Strang

Generated on 2024-09-30 00:18 GMT / https://hdl.handle.net/2027/uiug.30112007837898
Public Domain, Google-digitized / http://www.hathitrust.org/access_use#pd-google
Digitized by Google
Original from UNIVERSITY OF ILLINOIS AT URBANA-CHAMPAIGN

& McGuire bid $57,608.70. All the above call for asphalt construction. Other bids were: Utah rock asphalt, A. A. Clark, $56,348.81; bitulithic, Warren Bros. company, $48,007.54; Strang & McGuire, $54,397.02; dolarway, Northwestern Paving Co., $38,832.23; Bird & Mendenhall, $36,905.72; A. A. Clark, $41,-847.19.

Brigham City, Utah.—The city council has let a contract amounting to $6000 to J. W. Stack, of Helena, Montana, for sidewalk improvement on Forest street between the Oregon Short Line depot and Main street, a distance of eight blocks.

Provo, Utah.—A contract for sidewalk paving in the Springville roadway was let to Holman Bros. for $4478.79. The unit cost is 57c. per front foot for a 4-ft. sidewalk, the property-owners to remove their own fences and trees.

Salt Lake City, Utah.—Utah rock asphalt is to be used for paving, curbing, and gutters on Second South street west. Cost of the work has been estimated at $20,000.

Spokane, Wash.—Contract has been awarded to Twohy Bros. for excavating 2,000,000 yd. of rock and earth for the Oregon-Washington Railroad & Navigation Co. Portions of the work including concreting have been sublet to Gates & Rogers Construction Co. and the Inland Empire Hassam Paving Co. ——The Board of County Commissioners has appropriated $20,000 for the construction of 1½ miles of road for the improvement of the Market street extension at Hillyard.

Pomeroy, Wash.—Surveys of the new road through Garfield county are practically completed. R. W. Rigsby and J. E. Tupper are county engineers.

Olympia, Wash.—The State Highway Commission has decided to proceed by force account with work on state roadway No. 1, Ferry county, and state roadway No. 10, Okanagon county, $12,980 to be expended on the former and $8653 on the latter.

Walla Walla, Wash.—The city commissioners have decided to sell $5900 in bonds for paving Division street.

Wenatchee, Wash.—It has been decided to rush work on state road No. 7. Will R. White is engineer for the State Highway Commission and S. M. Percival is right-of-way agent.

Colfax, Wash.—Contract has been let for improvement of Dean way and Park street to Warren Construction Co. Oil macadam is to be used. The bid for the Dean way improvement was $3988.65, and for work on Park street $2614.90.——Steps have been taken to secure a new highway from Colfax to Pullman, a distance of 18 miles. Mr. Miller, the county engineer, has been instructed to make the survey.

Pendleton, Ore.—A city ordinance has been passed calling for the paving of West Alta street from Main to Chestnut, Chestnut from Alta to Webb, Water from Main to Vincent, Vincent from Water to Lewis, and Lewis from Vincent to Lee.

North Yakima, Wash.—Contract for paving 14 blocks on North First and Second streets has been let to the Independent Paving Co. of Seattle.

Republic, Wash.—County commissioners have let a contract for a portion of the new permanent highway, including 2 miles of road between Republic and the international boundary line, to Foster & Hindle, of Spokane, at a price of $12,000.——An appropriation of $12,980 has been made for the improvement of state road No. 4 between Republic and the Columbia river. Will R. White is chief engineer for the State Highway Commission and Fred H. Richardson is engineer in charge of the work at this point.

Moscow, Idaho.—Preliminary surveys for the proposed paving of Deakin avenue are being carried out by A. H. Jessup, chief engineer.——An ordinance has been passed by the city council creating improvement district No. 3, which provides for paving, curbing, grading, and the installation of storm sewers from the depot of the Spokane & Palouse railroad and the Oregon-Washington R. R. & N. Co. to the west line of Pine street.

Railways

Los Angeles, Cal.—A new railroad is projected to reach Blythe City and to tap the Palo Verde valley, starting from a point near Parker, on the Santa Fe railroad, in Riverside county. John Denair, of Los Angeles, is promoting the project. It is stated that $100,000 has been subscribed by Palo Verde valley farmers.——Double track work on Cajon mountain from San Bernardino to the summit has been completed by the Santa Fe at a cost of $2,000,000.

Fresno, Cal.—An electric railroad is projected to run between Fresno and Clovis. Mahoney Bros., contractors, of San Francisco,

Generated on 2024-09-30 00:20 GMT / https://hdl.handle.net/2027/uiug.30112007837898
Public Domain, Google-digitized / http://www.hathitrust.org/access_use#pd-google
Digitized by Google
Original from UNIVERSITY OF ILLINOIS AT URBANA-CHAMPAIGN

are financing and will construct the work at a cost of about $300,000.

San Francisco.—The San Jose Railways has been directed by the Railroad Commission to reconstruct as a standard-gauge line its present narrow-gauge section from San Jose to Toyan station, a distance of 4½ miles.——The Southern Pacific Co. has ordered 110 all-steel passenger cars for the equipment of the Pacific system.

Salt Lake City, Utah.—The Salt Lake & Alta Railroad Co. has incorporated for the purpose of constructing a standard-gauge track between Midvale and Wasatch, a distance of about 11 miles, up Little Cottonwood canyon. The road is already in course of construction, and about 4 miles has been completed. The officers of the company are: J. G. Jacobs, president; F. P. Jacobs, vice-president; E. C. Ashton, secretary and treasurer; George E. Cutler, W. O. Williams, Norman W. Haire, and C. W. Blethen, additional directors. The capital stock of the company is divided into 4000 shares of $25 each. Its offices are in room 2, McIntosh building, Salt Lake City.——Survey has been commenced on an extension of the Holliday line of the Utah Light & Railroad Co.

Logan, Utah.—A new electric railroad is planned from Alexander, Idaho, through Logan county to Ogden. Approximately $6,000,000 will be expended for this purpose. Fred W. Crockett, an attorney of Logan, is interested in the project. It is stated that an 18,000-hp. electric power-plant will be built.

Spokane, Wash.—Contract for the construction of the Oregon Short Line shops at Pocatello has been let to Lynch & Canon Engineering Co., its bid having been $125,000.——The O. W. R. R. & N. Co. has let a contract to the Hassam Paving Co. for removing 70,000 cu. yd. of rock for the freight yard depot and warehouse extension, and 35,000 cu. yd. of rock west of the fill now being made near Monroe-street bridge; $125,000 will be expended for doing this work.

Eugene, Ore.—The newly constructed section of the Portland, Eugene & Eastern railroad between Eugene and Corvallis has been completed.

Lewiston, Idaho.—The Camas Prairie railroad will expend $200,000 for extensions and improvements of the Lewiston terminals.

North Yakima, Wash.—Applications for right-of-way through Natchez pass have been filed by Robert E. Strahorn for the construction of an extension of the Yakima valley line to the O. W. R. R. & N. Co. across the Cascade mountains.

Irrigation and Water Supply

San Jacinto, Cal.—The city trustees are considering plans for increasing the water-supply for domestic consumption.

Redlands, Cal.—The second well of a series of four for a municipal water-supply system in Reservoir canyon has been completed. The well is supplying 75 inches of water using an air-lift.

Los Angeles, Cal.—The Palo Verde Irrigation Co. has decided to expend $1,000,000 for extension of its irrigation system. C. K. Clark is chief engineer.

Fresno, Cal.—A new irrigation district is contemplated embracing a total of 600,000 acres of land on the west side of San Joaquin river. I. Teilman, chief engineer for the Fresno Canal Irrigation Co., is interested.

San Francisco.—Reports from the East would indicate that an early reorganization may be expected of the American Water Works & Guarantee Co., one of the Kuhn interests.

Stockton, Cal.—The Security Land Co., of Bakersfield, has purchased over 1400 acres of land about 12 miles southeast of Stockton. Roads are to be built, pumping plants installed, and other improvements made.

Orland, Cal.—Bids for the construction of 6½ miles of county highway from Big Stony creek to Orland East Reservoir of the Orland Irrigation Project have been advertised by the U. S. Reclamation Service. The Water Users' Association of Orland will decide on October 7 whether or not they desire to extend the Orland project by an area of 6000 acres, and thereby increase their entire project to about 20,000 acres.

Tehama, Cal.—The city has voted bonds providing $10,000 for the installation of a municipal water system.

Chico, Cal.—Plans are under way for establishment at Paradise of a large irrigation project. Martin C. Polk is city engineer, and James Pearson and Richard White have the project in hand.

Red Bluff, Cal.—A contract is being prepared to be entered into between a local committee and the U. S. Reclamation Service for the Iron Canyon Reservoir Project.

Generated on 2024-09-30 00:21 GMT / https://hdl.handle.net/2027/uiug.30112007837898
Public Domain, Google-digitized / http://www.hathitrust.org/access_use#pd-google
Digitized by Google
Original from UNIVERSITY OF ILLINOIS AT URBANA-CHAMPAIGN

E. G. Hopson is supervising engineer for the Reclamation Service, and Mr. Patch, of Klamath Falls, is project engineer.

Grass Valley, Cal.—The city council has decided to hold a special election for the purpose of voting $20,000 in bonds for the improvement and extension of the city water system.

Woodland, Cal.—The State Water Commission has denied the application of Charles Wheeler for an injunction restraining the Yolo Water & Power Co. from securing further rights around Clear lake for the development of its irrigation project. It is expected that orders will soon be issued to proceed with development work.

Fall River Mills, Cal.—The Pit River Power Co. is preparing to put into operation its new irrigation system in Fall River valley. A large pumping plant is to be installed near the Joseph Fitzwater place, and another pumping plant about 4 miles above Fall River Mills.

Salt Lake City, Utah.—The Utah Lake Irrigation Co. has completed its project in the Salt Lake valley. The pumping plant providing water for irrigating 10,000 acres of farm land is ready for operation. L. P. Murdoch, of Heber City, is president of the company, and J. W. Knight, of Provo, is vice-president. F. W. Kirkham is agent at Salt Lake City, with offices in the Boston building.

Ogden, Utah.—Work on the South Fork dam will be rushed as much as possible in order that the concrete construction may be completed before the freezing weather commences.

Spokane, Wash.—The city has awarded a contract for 600 water meters to the Hughes Flume Co., representing the Trident Meter Co. The bid was $8.40 for ⅝ by ½-in. meters, and $8.60 for ⅝ by ¾-in. meters.

Boise, Idaho.—The State Land Board has decided to abandon the Carey Act irrigation project known as Idagon, comprising 9000 acres in Owyhee county near the Oregon line. The estimated cost was $500,000, and $75,000 was spent for surveys, water rights, etc.

Priest River, Idaho.—Contract has been let to C. A. Cochrane, of Spokane, for the construction of a new water-works system at a price of $11,978. C. E. Bryant, of Moscow, bid $12,389; Mars Construction Co., of Portland, bid $12,714; the West Coast Co., of Spokane, bid $12,960.

Miscellaneous Engineering Construction

Manhattan Beach, Cal.—The city council will authorize the construction of a 15-ft. cement walk and 6-ft. retaining wall along the ocean front at a cost of $120,000.

Los Angeles, Cal.—Plans and specifications are completed for cutting the harbor boulevard through Nob Hill, cutting down Timm's point, and the reclamation of a 146-acre tract. S. A. Jubb is harbor engineer.——The Board of Works has authorized payment of $12,934.85 for rejected concrete piles that were declared to have been defective due to faulty specifications.——The Southern Pacific Co. has placed a contract with the Alta Planing Mill Co. for the erection of the new Arcade station.——Tentative plans are under consideration for the development of the Outer Harbor Dock & Wharf Co.'s property which involve an estimated outlay of $5,000,000 to $6,000,000.

Alhambra, Cal.—A new reinforced concrete bridge over Mill creek is under consideration. Mr. Downes is city engineer.

San Francisco, Cal.—Jerome Newman, chief engineer of the State Harbor Commission, has reported that plans for the improvement of Solano City harbor will be completed within about six weeks.

Sunnyvale, Cal.—The Board of trustees is preparing an ordinance calling for an election to vote a bond issue of $35,000 for new sewers. F. A. Nikerk is city engineer.

Reedley, Cal.—An election will be held in October to vote bonds in the sum of $75,000 for water and sewer improvements.

Oakland, Cal.—The city has awarded a contract to Clark & Henery Construction Co. for a suction dredge at a price of $98,950.

Chico, Cal.—Contract for the construction of a dam for the Los Verjels Land & Water Co. in Dry creek has been awarded to the Chico Construction Co. at a price of $10,000.——Contract has been awarded to Ernest Graessler for the construction of a septic tank at a price of $3000.

Redding, Cal.—The plans of Thomas & Post, of Los Angeles, for a reinforced concrete bridge over the Sacramento river at Reids ferry have been tentatively accepted and submitted to the State Highway Commission for approval.——The Supervisors have awarded a contract for constructing a bridge across Middle creek to the Chico Construction Co. at a price of $2593. Other

Generated on 2024-09-30 00:23 GMT / https://hdl.handle.net/2027/uiug.30112007837898
Public Domain, Google-digitized / http://www.hathitrust.org/access_use#pd-google
Digitized by Google
Original from UNIVERSITY OF ILLINOIS AT URBANA-CHAMPAIGN

bids were: William Stevens, of Redding, $2595; McCarley & Ewing, $2865.

Willows, Cal.—The longest reinforced concrete rods ever rolled for a concrete bridge are being used in the Orland structure over Stoney creek. The rods are 114 ft. long. Luther C. Stiles is county engineer.

Sacramento, Cal.—Plans are under consideration to provide funds for paying half the cost of the proposed bridge across the Sacramento river at Walnut Grove. The estimated total cost is $80,000. Half the expense is to be carried in this year's tax levy and half in next year's levy.——Three bids were made for levee construction for the city of Sacramento. The Southern Pacific Co. bid $1.08 per cubic yard; Haviland, Dozier & Tibbetts bid 9½% above cost; F. E. Frey bid from 8 to 10% above cost. No action was taken with regard to letting the contract.

Placerville, Cal.—The Sacramento Lumber & Box Co. has been incorporated with a capital stock of $500,000. The directors are E. E. Pollock and J. E. Moffett, of Sacramento; Clayton P. Smith, Berkeley; A. Burlingame Johnson and Earl Johnson of Pasadena.

Walnut Grove, Cal.—Preliminary survey is under way for the proposed bridge over the Sacramento river. Mr. Miller is county engineer.

La Grande, Ore.—Contract for a new steel bridge to span Catherine creek has been let to Joseph Campbell, county road superintendent.

Spokane, Wash.—The Oregon-Washington R. R. & N. Co., Chicago, Milwaukee & Puget Sound union depot will be built by Grant, Smith & Co., contractors, of Seattle, at a price of $650,000.——The Orofino Portland Cement Co., of Orofino, Idaho, has let a contract to Petram & Lotterburger, of Spokane, for a machine-shop building at a price of $20,000.——The matter of a downtown septic sewer will not be acted upon before January 1914. The estimated cost is $250,000. ——The city treasurer has issued a call for bonds aggregating $92,000 to pay for various municipal improvements.——Due to the soft formation encountered in making borings for the construction of 10 overhead tracks for the Oregon-Washington R. R. & N. Co., 700 piles have to be driven. Contract has been let to the Raymond Concrete Pile Co., of Portland, amounting to $20,000.

Davenport, Wash.—A new sewer is to be constructed in 7th street from Main to Washington street, a distance of 7¼ miles.

Olympia, Wash.—The State Board of Finance has put in a bid for $35,000 of the Lewiston bond issue, thereby opening the way for a friendly suit to determine the validity of the bonds.

Palouse, Wash.—The Washington-Idaho Mt. R.R. from this city to Bovill, a distance of 47 miles, is being improved by filling all trestles and by a steel reinforced concrete culvert, 6 ft. diam., 280 ft. long.

Kellogg, Idaho.—The Mine Owners' Association has let a contract to Callen Bros., of Coeur d'Alene city, for placing 3700 ft. of piling along the river.——The Oregon-Washington R. R. & N. Co. has approved the plans for the city sewers in so far as they affect the company's property.

Lewiston, Idaho.—The Northern Pacific railroad will commence construction work at once upon the proposed new steel bridge across Clearwater river at Spaulding. The length of the structure will be about 1000 ft. and cost about $150,000.

Ogden, Utah.—The Denver & Rio Grande railroad has let a contract to the Continental Construction Co. for building a new freight depot at a price of $35,000.

Provo, Utah.—A dam is to be built by the city for the purpose of facilitating shipping to Mosida. Cost will be about $1550.

Salt Lake City, Utah.—The new pumping plant at the city intercepting sewer will be completed and ready for operation within about three weeks. Sylvester Q. Cannon is city engineer and L. H. Krebs is sewer engineer.

Eureka, Mont.—The city council has let contracts for water extension to Thomas Kelly, of Anaconda, at a price of $2793.50, and to C. H. Kelly, Kalispell, for a sewer system at a cost of $11,405.

Denver, Colo.—Preparation of plans for the construction of the Moffat tunnel is under way. D. W. Brunton and John W. Finch are engineers in charge of the work.

Power, Gas, and Electricity

Brigham City, Utah.—Officials of the Phoenix Construction Co. have been inspecting the route of the power-transmission line now in course of construction for the Utah Power Co. The power line is estimated to cost about $800,000, and extends from Grace, Idaho, to Salt Lake City.——A plan has been

Generated on 2024-09-30 00:20 GMT / https://hdl.handle.net/2027/uiug.30112007837898
Public Domain, Google-digitized / http://www.hathitrust.org/access_use#pd-google
Digitized by Google
Original from UNIVERSITY OF ILLINOIS AT URBANA-CHAMPAIGN

worked out for the installation of a municipal electric-power plant at Salt Lake City for lighting purposes, to be built at a cost of about $65,000. W. H. Korns is city commissioner in charge of the project.

Oroville, Cal.—It is stated that construction work on the Big Bend plant for the Great Western Power Co. on the north fork of the Feather river, 18 miles north of Oroville, is to be commenced on October 1.

Provo, Utah.—The Beaver River Power Co. has been incorporated under the laws of Colorado. W. L. Biersach is agent for the company in the state of Utah. F. C. Noon is president and H. R. Waldo is secretary.

Milton, Ore.—The city council has decided to install a new arc light system at a cost of $1300. L. E. Coyle has charge of the work.

Keno, Ore.—Preliminary surveys have been completed for an electric-power project on the Klamath river. The plant can be operated under a head of 780 ft. with a flow of 1200 sec-ft. of water, and approximately 100,000 hp. will ultimately be generated. This work is being directed by the federal government and the state government of Oregon. John H. Lewis is state engineer.

Coeur d'Alene, Idaho.—The city council is considering the matter of municipal ownership of lighting facilities.——The State Public Utility Board has been appealed to to readjust rates charged by the Consumers company and Kootenai Power Company.

Personal

CHARLES OFF, superintendent of the Lakeview Oil Co., has resigned his position.

HUGH C. LEWIS has been inspecting bridges along the line of the Washington state highway.

F. H. NEWELL, Director of the U. S. Reclamation Service, has been on an inspection trip through Utah.

ELWOOD MEAD, irrigation engineer, has been appointed professor of rural institutions at the University of California.

J. F. REARDON, of Everett, Washington, has been appointed state track inspector to succeed J. R. WALKER, of Spokane.

CHARLES KIRBY FOX, consulting engineer, of Pomona, California, has gone to Cedarville, Modoc county, on professional business.

JEROME NEWMAN, chief engineer for the California State Board of Harbor Commissioners, has been retained by the Solano Irrigated Farms Co. to lay out plans for their proposed harbor improvements.

HARRY R. JOHNSON is conducting a general geological investigation of territory in the Fullerton-Whittier oil district of California.

SAMUEL FORTIER, chief engineer for the U. S. Department of Agriculture, has been inspecting the South Fork damsite near Ogden, Utah.

B. H. VAN DER LINDEN, geologist for the Shell-Royal Dutch oil interests, has been visiting the Los Angeles and Orange county fields.

JOSEPH JACOBS, consulting engineer, of Seattle, has recovered from a recent operation for appendicitis and has returned to his office.

GEORGE A. BARNES, of Pittsburgh, Pennsylvania, has been appointed general manager for the Southern California and Midway Gas companies.

F. P. DAVIS, chief engineer for the U. S. Reclamation Service, attended a meeting of reclamation district chiefs at Ogden, Utah, on September 1.

E. H. BENJAMIN has resigned his position as president of Joshua Hendy Iron Works to resume his private practice as consulting mining engineer.

J. H. PURDY, general manager for the Kuhn irrigation interests, has been inspecting the property of the Sacramento Valley irrigation project in California.

E. M. CHANDLER, engineer for the Burbank irrigation project near Walla Walla, Washington, has been in California inspecting the Kuhn irrigation projects.

D. F. MCGEE, chief engineer for the Pacific Power & Light Co., was one of the party that recently inspected the company's properties at Freewater, Oregon.

C. K. CLARKE, engineer for the Palo Verde irrigation district at Palo Verde, California, has been appointed chief engineer for the Cibola Valley irrigation district.

W. G. ALEXANDER, WILLIAM SOUTHERNED, and JOHN D. CRUMMEY, of San Jose, have been appointed by the Governor of California as harbor commissioners at that place.

B. H. BURRELL, road expert for the U. S. Bureau of Public Roads, has completed a report with regard to the proposed $1,000,000 road system in Salt Lake county, Utah.

S. B. DOTEN, formerly professor of entomology, University of Nevada, has been placed at the head of the University Experi-

Generated on 2024-09-30 00:20 GMT / https://hdl.handle.net/2027/uiug.30112007837898
Public Domain, Google-digitized / http://www.hathitrust.org/access_use#pd-google
Digitized by Google
Original from UNIVERSITY OF ILLINOIS AT URBANA-CHAMPAIGN

ment Station, succeeding G. H. TRUE. S. E. Ross has been appointed soil expert to succeed J. T. SHARP. G. D. POWERS has been made assistant professor of engineering.

J. B. LIPPINCOTT, formerly assistant chief engineer for the Los Angeles aqueduct, has been retained by the city of San Diego to investigate its present water-supply system.

JOHN WELLINGTON FINCH, former state geologist for Colorado, has been appointed consulting engineer for the city of Denver in connection with the proposed Moffat tunnel.

ARTHUR L. ADAMS, one of the best known hydraulic engineers and irrigation experts on the Pacific Coast, died at his home in Oakland on September 18 at the age of 49 years.

JOHN C. HOYT, hydraulic engineer in charge of the Division of Surface Waters of the U. S. Geological Survey, has been inspecting the water resources in Utah and Nevada.

THEO. C. WILLIAMS, formerly civil engineer for the architect for the state capitol at Salt Lake City, Utah, has resigned his position to join the engineering staff of the Western Union Telegraph Co. in New York.

W. M. BOSWORTH, formerly chief engineer for the Tacoma Railway & Power Co., has been delegated by the federal government to survey the route for an automobile highway between North Yakima, Seattle, and Tacoma.

PREVOST HUBBARD, of the Division of Roads and Pavements, Institute of Industrial Research, Washington, D. C., has been delegated to serve as a member of the United States Committee on Standardization of Nomenclature of Road Material. ARTHUR H. BLANCHARD, of the faculty of Columbia University, has been delegated to serve on the same committee.

Society Meetings

THE twenty-first annual convention of the Pacific Coast Gas Association was held in San Jose on September 16. The meeting was called to order by C. S. Vance, president, and the following papers were read: 'Oil Gas,' Leon B. Jones, San Francisco; 'Industrial Uses of Gas,' John B. Redd, San Francisco; 'Rate Making,' A. C. Humphreys, New York; 'Modern Gas Distribution and the Part Played by the Automobile,' D. E. Kepplemann, San Francisco; 'Gas Street Lamps,' C. B. Babcock, San Francisco; 'Gas Company's Public Policy,' L. A. Wright, San Diego; 'Standards of Quality and Service for Oil Gas,' H. M. Papst, Portland, Oregon; 'Wrinkles,' H. W. Burkhardt, Los Angeles; 'Experiences,' John Clements, Oakland; 'Novelties,' H. P. Pitts, San Francisco.

Members of the AMERICAN SOCIETY OF CIVIL ENGINEERS have taken steps toward the formation of a local association for the Society at Los Angeles. An informal dinner is to be given on October 14, when plans of organization will be discussed. The members who are organizing the local chapter are J. B. Lippincott, G. S. Binckley, A. C. Hanson, Members; Chas. H. Lee, W. C. Sawyer, Associate Members.

Commercial Paragraphs

DENNY-RENTON CLAY & COAL CO., Hoge Bdg., Seattle, is furnishing paving brick laid on First street, San Francisco. T. H. Collins, promotion engineer, has returned to Seattle.

MORELAND MOTOR TRUCK CO., Los Angeles, has opened a branch office and service stations at 4th and Harrison streets, San Francisco. This company has the fourth largest motor truck factory in the United States and manufactures five sizes of the Moreland distillate motor truck.

The COAST CULVERT & FLUME CO., Kenton station, Portland, has sold to the Desert Land Board, Oregon, 6500 ft. of American Ingot iron flume, having carrying capacity of 300 second feet, for installation at the Tumalo Irrigation Project situated in central Oregon.

The WESTINGHOUSE ELECTRIC & MFG. CO. reports a shipment of eight 4000 kva. and four 150-kva. O. I. W. C. transformers, two motor generator sets and miscellaneous switchboard material consigned to Takata & Co., at Tokio, Japan. This material is to be used in connection with the large hydroelectric power development for the Inawashiro Hydro-Electric Power Co., which is building a large plant 145 miles from Tokio. Current will be generated at this point and stepped up to 115,000 volts. Twenty-five cars were required for loading this material, and the total weight of the shipment is 913,972 lb. This is only one-third of the total amount of apparatus called for in the contract.

Generated on 2024-09-30 00:28 GMT / https://hdl.handle.net/2027/uiug.30112007837898
Public Domain, Google-digitized / http://www.hathitrust.org/access_use#pd-google
Digitized by Google
Original from UNIVERSITY OF ILLINOIS AT URBANA-CHAMPAIGN